Price List

Leader in Water Tempering Technology Since 1891

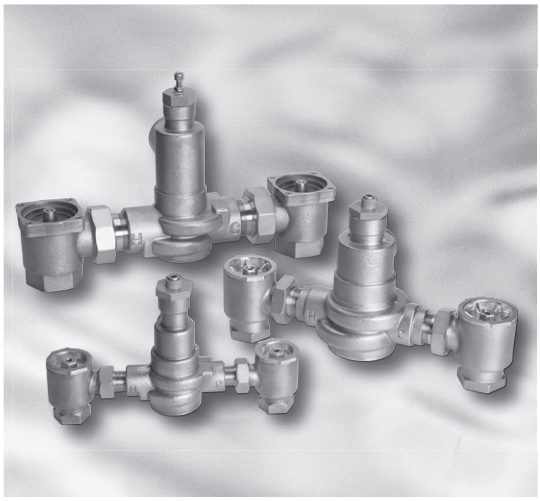

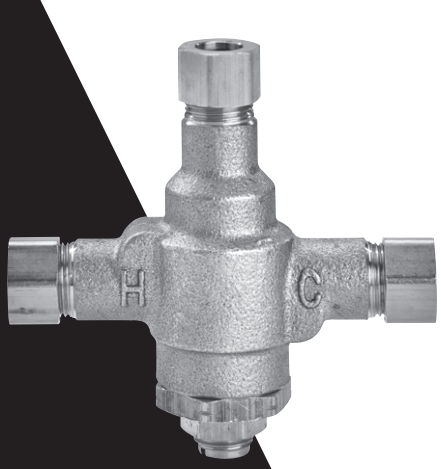

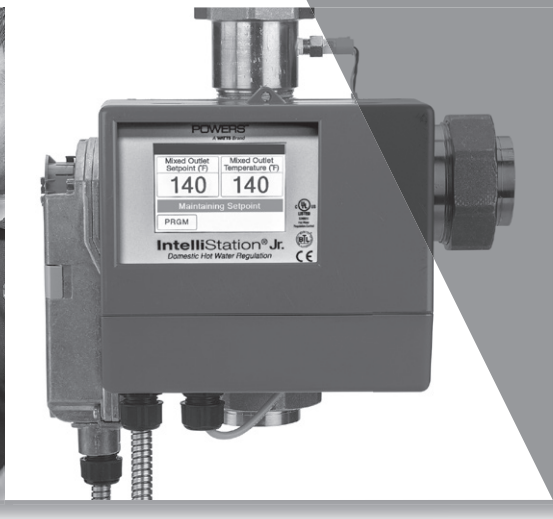

Effective May 12, 2025

All prices supersede previous issues, are temporary and subject to change without notice.

PowersControls.com

POWERS™
A WATTS Brand

Electronic is Green!

For the latest Powers pricing information in electronic format, visit our Data Exchange at:

www.wattswater.com/dataexchange

- Download product and list price data in .pdf
- Easy access to list price data for business systems
- Sign up for e-mail alerts when data is updated
- Access other Watts Water Technologies brands pricing data

Table of Contents

Standard Terms and Conditions of Sale 2-3

Pressure Balancing Valves
- Series 900 Biltmore® 4
- Series PB410 HydroGuard® 6-7

Combination T/P Bath, Shower and Lavatory Valves
- HydroGuard® T/P Series e700 5
- HydroGuard® T/P Series e423 Valves 9
- HydroGuard® T/P Series e420 8-9
- HydroGuard® T/P Series e427/e428 10

Thermostatic Lavatory Valves
- HydroGuard® Series LFG480/LFE480 11
- HydroGuard® Series LFLM490/LFLM490-10 11
- HydroGuard® Series LFLM495 12

Thermostatic Master Mixing Valves
- HydroGuard® XP Series LFMM430 & Supply Fixtures 13-14
- HydroGuard® XP Series LFSH1430 & Supply Fixtures 15
- The Lead Free Tempering Re-circulation Loop 16
- HydroGuard® XP Series LFMM430 & LFSH1430 HiLo Supply Fixtures . 17
- HydroGuard® XP High Capacity Systems Series LFSH1430 18

IntelliStation® 2
- Single & Multi-Valve Lead Free 19

IntelliStation® 2S
- Single & Multi-Valve Lead Free 20-21

POWERSTATION™
- Single-Valve Lead Free 22
- Multi-Valve Lead Free 23

Emergency Tempering Valves, HydroGuard® ES/ETV Series 24-25

Hydropanel II Modular Systems
- With e700 Valves 26
- With 900, PB410 and e420 Valves 27-28

HydroGuard® ESP™
- Showers 29
- Shower Systems (Hydropanel II ESP) 30

Alarm Systems
- Lead Free Aqua Sentry® 2 Series LF460 31

Thermostatic Specialty Valves
- Fotoguard 32
- Fotopanel 32

Accessories
- High Temperature Shutoff Device 33
- Checkstops 33
- Showerheads 33
- Institutional Showerheads 33
- Arm/Flange Kits 34
- Hand Showers 34
- Tub Spouts 35
- Diverters 35
- Vacuum Breakers 35
- Volume Control Valves 35
- Dial Thermometers 35
- Metering Valve Shower 35

Self Operating Regulators
- #11 Complete Regulators 36
- #11 Lower Housing Assemblies 36
- #11 Thermal Systems and Accessories 37

Flowrite® Valves and Accessories
- Heavy Duty Bronze Series Flowrite® Valves and Accessories . . 38-39
- Heavy Duty Iron Series Flowrite® Valves and Accessories 40-41
- Flowrite II Unmounted Valve Accessories 42

Accritem® Controllers and Accessories 43

Parts 44-63

Freight Terms: All prices are FOB factory. Full freight is allowed on shipments of $2,500 or more within the continental U.S.A. Such allowance is based on the lowest motor carrier transportation rate. Terms for export shipment will be provided on request.

Terms of Sale: All sales are F.O.B. shipping point.

Payment Terms: Invoices are due and payable 30 days from the date of invoice.

Purchase Order Forms: Orders submitted on the Purchaser's own purchase order forms will be accepted only with the express understanding that no statements, clauses or conditions contained in said order form will be binding on the Seller if they in any way modify the Seller's own terms and conditions of sales.

Minimum Order Requirements: Minimum order requirements are $200 net.

Special Products: Orders for special or modified products are non-cancelable. In the event that the customer cancels an order for such products, Watts shall charge the customer an amount equal to Watts' costs and expenses incurred in performing the purchase order prior to receipt of notice of cancellation.

Partial Shipment: The Seller reserves the right to make partial shipments from time to time and render invoices therefor which shall be due and payable in accordance with stated payment terms.

Delays: The Seller shall not be liable for any loss, damage, or delay occasioned by any causes beyond the Seller's control, including, but not limited to governmental actions or orders, embargoes, strikes, differences with workmen, fires, floods, accidents, or transportation delays.

Rejection of Shipments: If the Purchaser is unable or unwilling to accept any shipment, the Purchaser shall be liable to the Seller, in addition to any other rights to which the Seller may be entitled, for freight, express, storage, extra cost of handling, and other expenses incurred thereby.

Taxes: The amount of any present or future sales, use, occupancy, excise, or other tax, federal, state or local, which the Seller now, or hereafter shall be legally obligated to pay, either on its own behalf or on behalf of the Purchaser or otherwise, with respect to the material covered by this order or contract, shall (unless the prices contained herein are stated expressly to include such tax) be added to such prices and paid by the Purchaser. Purchaser agrees to report and pay any tax direct on non-exempt transaction, in case Seller's invoices do not indicate a charge therefor.

Limited Warranty: The Seller warrants each HydroGuard T/P e700 series valve to be free from defects in material and workmanship under normal usage for a period of one year from the date of original shipment. The Seller further warrants the internal tempering mechanism to be free from defects in material and workmanship under normal usage for a period of five years from the date of original shipment. The Seller warrants all other equipment manufactured by it to be free from defects in material and workmanship under normal usage for a period of one year from the date of original shipment. In the event of such defects within the applicable warranty period, the Seller will, at its option, repair or replace the product without charge.

The remedy described in the paragraph above shall constitute the sole and exclusive remedy for breach of warranty, and the Seller shall not be responsible for any incidental, special or consequential damages, including without limitation, lost profits or the cost of repairing or replacing other property which is damaged if the product does not work properly, damages or other costs resulting from labor charges, delays, vandalism, negligence, fouling caused by foreign material, damage from adverse water conditions, chemicals, decomposition by galvanic action, or any other circumstances over which the Seller has no control. This warranty shall be invalidated by any abuse, misuse, misapplication or improper installation of this product.

THE WARRANTY SET FORTH HEREIN IS GIVEN EXPRESSLY AND IS THE ONLY WARRANTY GIVEN BY THE SELLER WITH RESPECT TO THE PRODUCTS. THE SELLER MAKES NO OTHER WARRANTIES, EXPRESS OR IMPLIED. THE SELLER SPECIFICALLY DISCLAIMS ALL OTHER WARRANTIES, EXPRESS OR IMPLIED, INCLUDING BUT NOT LIMITED TO THE IMPLIED WARRANTIES OF MERCHANTABILITY AND FITNESS FOR A PARTICULAR PURPOSE.

Some states do not allow limitations on how long an implied warranty lasts, and some states do not allow the exclusion or limitation of incidental or consequential damages. Therefore the above limitations may not apply to you. This Limited Warranty gives you specific legal rights, and you may have other rights that vary from state to state. You should consult applicable laws to determine your rights. **SO FAR AS IS CONSISTENT WITH APPLICABLE STATE LAW, ANY IMPLIED WARRANTIES THAT MAY NOT BE DISCLAIMED, INCLUDING THE IMPLIED WARRANTIES OF MERCHANTABILITY AND FITNESS FOR A PARTICULAR PURPOSE, ARE LIMITED IN DURATION TO ONE YEAR FROM THE DATE OF ORIGINAL SHIPMENT.**

Purchaser's Remedies: IN NO EVENT SHALL THE SELLER BE LIABLE, IN CONTRACT, TORT, STRICT LIABILITY, OR UNDER ANY OTHER LEGAL THEORY, FOR INCIDENTAL, INDIRECT, SPECIAL OR CONSEQUENTIAL DAMAGES, REGARDLESS OF WHETHER IT WAS INFORMED OF THE POSSIBILITY OF SUCH DAMAGES, AND IN NO EVENT SHALL THE SELLER'S LIABILITY EXCEED AN AMOUNT EQUAL TO THE SALES PRICE OF THE PRODUCTS. THE FOREGOING LIMITATIONS SHALL APPLY TO THE FULLEST EXTENT PERMITTED BY LAW.

Shortage Claims: Claims for shortage or incorrect filling of orders must be made within 15 days from the date of delivery.

Return Goods Policy: No material shall be returned without authorization. When credit is issued it will be at the price charged, or prevailing price if lower, less handling charges based on costs of reconditioning, boxing, etc. However, a minimum 25% handling charge will apply. A minimum handling charge of $20.00 is applied whenever the 25% handling deduction does not total $20.00. Products which are obsolete or made to special order are not returnable.

Returned Material Procedure: Customer Service will provide a Return Material Authorization (RMA) number, which must be written on all shipping label(s) of the returned material. Material received without an RMA number may be refused and returned to the sender at the sender's expense. When calling or faxing to request an RMA number, the following information will be necessary:

- Seller invoice number and/or sales order number
- Seller part number
- Seller product description
- Quantity of material to be returned
- Reason for return—be specific
- All returns must be shipped freight prepaid

All returned material is subject to inspection by the Seller and should be returned in original unopened shipping cartons or suitably packed to prevent damage in transit.

Special order and non-standard material is non-cancelable and not returnable.

ALL MTO PRODUCTS ARE NON-RETURNABLE

Customer Support:

For Customer Service: (888) 432-8932; Monday through Friday, 8:00 AM to 5:00 PM EST.

For Technical Support: (888) 432-8932; Monday through Friday, 8:00 AM to 5:00 PM CST.

Note: Prices and terms are subject to change without notice and supersede all previous quotations. The Seller reserves the right to change or modify product design or construction without prior notice and without incurring any obligation to make such changes and modifications on products previously or subsequently sold. Weights are not guaranteed but are shown only for the Purchaser's reference.

Governing Law: These terms and conditions shall be governed by, construed, and enforced in accordance with the laws of the Commonwealth of Massachusetts, without giving effect to its choice of law rules. All disputes under these terms and conditions shall be resolved exclusively by courts located in the Commonwealth of Massachusetts.

All Series 900 Pressure Balancing Mixing Valves include integral check/service stops, adjustable handle rotation limit stop, reversible inlets for back-to-back installation, four-port connections, and reliable poppet/diaphragm cartridge construction.

	Description	Order Code	Weight	List Price
P902	SS faceplate, metal lever handle. CP finish.			
	1/2" copper sweat connections	**P902H**	3.2	$1,088.00
	1/2" IPS connections	**P902G**	3.2	$1,109.00
P905	ABS faceplate with color-coded graphics, lever handle. CP finish.			
	1/2" copper sweat connections	**P905H**	3.0	$801.80
	1/2" IPS connections	**P905G**	3.0	$816.00
P909	ABS faceplate with color-coded graphics, acrylic handle. CP finish.			
	1/2" copper sweat connections	**P909H**	3.0	$995.60
	1/2" IPS connections	**P909G**	3.0	$1,021.00
P910	ABS faceplate with color-coded graphics, metal lever handle. CP finish.			
	1/2" copper sweat connections	**P910H**	3.0	$1,031.00
	1/2" IPS connections	**P910G**	3.0	$1,063.00

To order complete Series 900 systems:

P ☐ ☐ ☐ ☐ ☐ ☐ ☐ ☐ ☐ ☐

Valves

See above for selection of valve order code

	List Price	Weight (lbs)	Order Code
Showerheads, Arm and flange			
Economizer, Chrome-Plated ABS, Arm & Flange	$176.30	0.8	**J1**
Standard Chrome-Plated Brass, Arm & Flange	$252.10	1.2	**K1**
Deluxe, Chrome Plated Brass, Arm and Flange	$340.90	1.6	**M1**
Low Flow Shower (1.5gpm), Arm & Flange	$471.50	2.8	**G1**
Low Flow Shower (1.5gpm), Arm & Flange	$396.10	0.53	**H1**
Arm & Flange Only (no showerhead)	$107.80	0.3	**O1**
Economizer, Arm & Flange & Hi-Temp Shut-Off	$412.90	1.1	**J4**
Standard Arm & Flange & Hi-Temp Shut-Off	$488.50	1.5	**K4**
Deluxe Arm & Flange & Hi-Temp Shut-Off	$578.00	1.9	**M4**
Low Flow Shower (1.6 gpm), Arm & Flange & Hi-Temp Shut-Off	$708.70	3.1	**G4**
Low Flow Shower (1.5 gpm), Arm & Flange & Hi-Temp Shut-Off	$632.90	1.1	**H4**
Tub Spouts			
Non-Diverter, Chrome Plated 1/2" IPS	$155.50	0.4	**R**
Diverter, Chrome Plated 1/2" IPS	$186.20	0.7	**S**
Diverter, Chrome Plated 1/2" Slip-Fit	$203.50	1.0	**U**
Hand Shower Systems			
24" Chrome ADA Wall Grab Bar System	$1,520.00	4.7	**1**
36" Chrome ADA Wall Grab Bar System	$1,564.00	5.5	**2**
Standard, Hand Spray Push Button, CP Plastic, 2.50 gpm, Wall Mount, 3-Position, 2/Kit	$705.30	2.0	**5**
Standard, Hand Spray Push Button, CP Plastic, 2.50 gpm, Metal Hose, 24" Glide Rail	$921.20	2.6	**8**
Standard, Hand Spray Push Button, CP Plastic, 1.80 gpm WaterSense®, Metal Hose, 24" Glide Rail	$921.20	2.6	**8WS**
Standard, Hand Spray Push Button, CP Plastic, 2.50 gpm, Metal Hose, 30" Glide Rail	$1,241.00	3.1	**N**
Standard, Hand Spray Push Button, CP Plastic, 1.80 gpm WaterSense®, Metal Hose, 30" Glide Rail	$1,241.00	3.1	**NWS**
Professional, Hand Spray Push Button, White Plastic, 2.50 gpm, Metal Hose, 18" Glide Rail	$948.60	2.5	**P**
Professional, Hand Spray Push Button, White Plastic, 2.50 gpm, Metal Hose, 24" Glide Rail	$948.60	2.5	**7**
Professional, Hand Spray Push Button, White Plastic, 1.80 gpm WaterSense®, Metal Hose, 24" Glide Rail	$948.60	2.5	**7WS**
Deluxe, Hand Spray 5 Setting, CP Plastic, 2.50 gpm, Metal Hose, 24" Glide Rail	$1,486.00	3.2	**6**
Deluxe, Hand Spray 5 Setting, CP Plastic, 1.80 gpm WaterSense®, Metal Hose, 24" Glide Rail	$1,486.00	3.2	**6WS**
Deluxe, Hand Spray 5 Setting, CP Plastic, 2.50 gpm, Metal Hose, 30" Glide Rail	$1,778.00	3.3	**3**
Deluxe, Hand Spray 5 Setting, CP Plastic, 1.80 gpm WaterSense®, Metal Hose, 30" Glide Rail	$1,778.00	3.3	**3WS**
Low Flow (1.5 gpm), Hand Spray Pause, 4 Setting, CP Plastic, Metal Hose, 24" Glide Rail, WaterSense®	$1,442.00	3.2	**M**
Low Flow (1.5 gpm), Hand Spray Pause, 4 Setting, CP Plastic, Metal Hose, 30" Glide Rail, WaterSense®	$1,634.00	3.3	**L**
Diverters			
Concealed Diverting Valve, 1/2" IPS, Metal Handle	$763.40	3.0	**Y**
Diverter, Concealed, Deluxe ABS Handle	$814.90	3.0	**A**
Diverter, Concealed, Deluxe Metal Handle	$838.80	3.0	**B**
Exposed Diverter, Shower Arm-Type, Chrome-Plated	$245.00	0.5	**Z**
Vacuum Breakers			
Vacuum Breaker, Elevated, Chrome-Plated	$1,073.00	2.0	**V**
Vacuum Breaker, In-Line	$165.70	1.0	**W**

 ADA compliant

(Prices Effective 05/21/25)

All e700 Series valves feature advanced thermal actuators, adjustable handle rotation limit stop, integral checkstops, metal or ABS trim and 1/2" sweat connections. The e700 Series meets American with Disabilities Act (ADA) requirements.

5-year Limited Warranty.

e705

e707

e710

	List Price	Weight (lbs)	Order Code
Valves			
ABS Trim	$1,278.00	3.5	**e705**
Metal Trim	$1,366.00	3.5	**e710**
Euro Trim	$1,479.00	3.5	**e707**
Showerheads			
Economizer, Chrome-Plated ABS, Adjustable	$69.70	0.5	**J**
Standard, Chrome-Plated Brass	$145.00	0.9	**K**
Deluxe, Chrome-Plated Brass	$233.80	1.3	**M**
Low Flow (1.5 gpm), Chrome-Plated	$364.60	2.5	**G**
Low Flow (1.5 gpm), Chrome-Plated	$289.60	0.5	**H**
Arm and Flange Kits			
Standard Arm and Flange	$107.80	0.3	**1**
Deluxe Arm and Flange	$165.70	0.4	**2**
Standard Arm/Flange & Hi-Temp. Shut-Off	$344.20	0.6	**4**
Deluxe Arm/Flange & Hi-Temp. Shut-Off	$406.20	0.7	**5**
Tub Spouts			
Diverter, Chrome-Plated Brass, 3/4" IPS	$347.80	1.2	**Q**
Non-Diverter, Chrome-Plated, 1/2" IPS	$155.50	0.4	**R**
Diverter, Chrome-Plated, 1/2" IPS	$186.20	0.7	**S**
Diverter, Chrome-Plated Brass, 1/2" IPS	$320.30	1.3	**T**
Diverter, Chrome-Plated, 1/2" Slip-fit	$203.50	1.0	**U**
Hand Shower Systems			
24" Chrome ADA Wall Grab Bar System	$1,520.00	4.7	**1**
36" Chrome ADA Wall Grab Bar System	$1,564.00	5.5	**2**
Standard, Hand Spray Push Button, CP Plastic, 2.50 gpm, Wall Mount, 3-Position, 2/Kit	$705.30	2.0	**5**
Standard, Hand Spray Push Button, CP Plastic, 2.50 gpm, Metal Hose, 24" Glide Rail	$921.20	2.6	**8**
Standard, Hand Spray Push Button, CP Plastic, 1.80 gpm WaterSense®, Metal Hose, 24" Glide Rail	$921.20	2.6	**8WS**
Standard, Hand Spray Push Button, CP Plastic, 2.50 gpm, Metal Hose, 30" Glide Rail	$1,241.00	3.1	**N**
Standard, Hand Spray Push Button, CP Plastic, 1.80 gpm WaterSense®, Metal Hose, 30" Glide Rail	$1,241.00	3.1	**NWS**
Professional, Hand Spray Push Button, White Plastic, 2.50 gpm, Metal Hose, 18" Glide Rail	$948.60	2.5	**P**
Professional, Hand Spray Push Button, White Plastic, 2.50 gpm, Metal Hose, 24" Glide Rail	$903.40	2.5	**7**
Professional, Hand Spray Push Button, White Plastic, 1.80 gpm WaterSense®, Metal Hose, 24" Glide Rail	$948.60	2.5	**7WS**
Deluxe, Hand Spray 5 Setting, CP Plastic, 2.50 gpm, Metal Hose, 24" Glide Rail	$1,486.00	3.2	**6**
Deluxe, Hand Spray 5 Setting, CP Plastic, 1.80 gpm WaterSense®, Metal Hose, 24" Glide Rail	$1,486.00	3.2	**6WS**
Deluxe, Hand Spray 5 Setting, CP Plastic, 2.50 gpm, Metal Hose, 30" Glide Rail	$1,778.00	3.3	**3**
Deluxe, Hand Spray 5 Setting, CP Plastic, 1.80 gpm WaterSense®, Metal Hose, 30" Glide Rail	$1,778.00	3.3	**3WS**
Low Flow (1.5 gpm), Hand Spray Pause, 4 Setting, CP Plastic, Metal Hose, 24" Glide Rail, WaterSense®	$1,442.00	3.2	**M**
Low Flow (1.5 gpm), Hand Spray Pause, 4 Setting, CP Plastic, Metal Hose, 30" Glide Rail, WaterSense®	$1,634.00	3.3	**L**
Diverters			
Concealed Diverting Valve, 1/2" IPS, Metal Handle	$763.40	3.0	**Y**
Diverter, Concealed, Deluxe ABS Handle	$814.90	3.0	**A**
Diverter, Concealed, Deluxe Metal Handle	$838.80	3.0	**B**
Exposed Diverter, Shower Arm-Type, Chrome-Plated	$245.00	0.5	**Z**
Vacuum Breakers			
Vacuum Breaker, Elevated, Chrome-Plated	$1,073.00	2.0	**V**
Vacuum Breaker, In-Line	$165.70	1.0	**W**

Biltmore™ Series 900 Accessories/Parts

	Order Code	Weight	List Price
Thin Wall Installation	**900 119**	0.3	$103.90
Remodeling Plate, Stainless Steel, Polished Chrome	**900121D**	1.0	$204.10
Vandal-Resistant Screw Kit*	**900 034**	0.11	$96.00

**Parts discount applies*

(Prices Effective 05/21/25)

ADA compliant

Series PB410 HydroGuard® Pressure Balancing Valves

The series PB410 HydroGuard® features heavy, cast brass construction, a poppet type equalizing valve which offers a distinct advantage: it will not stick because of lime build-up or foreign
particles in the supplies. The adjustable metal-to-metal temperature limit stop prevents accidental scalding caused by our adjustment
of the handle. It also features integral checkstops, back to back and shallow installation. PB410 series is listed to ASSE 1016-P and certified to CSA B125 standard.

Model PB413000000

	Order Code	Weight	List Price
3 Port	**PB413**	4.0	$2,070.00
4 Port	**PB417**	4.6	$2,070.00

	Order Code	Weight	List Price

Series PB410 Accessories/Parts

Thin Wall Installation Accessory	**800 100**	0.3	$103.90
Stem Extension Accessory*	**410 233**	0.3	$102.50
Vandal-Resistant Screw Kit*	**420 267**	0.3	$36.10
Remodeling Plate, Stainless Steel. Polished Chrome	**900121D**	1.0	$191.60

**Parts discount applies*

To order complete Series PB410 systems…

	List Price	Weight (lbs)	Order Code
Port			
3 Port	$2,070.00	4.0	**PB413**
4 Port	$2,070.00	4.6	**PB417**
Showerheads			
Economizer, Chrome-Plated ABS, Adjustable	$69.70	0.5	**J**
Standard, Chrome-Plated Brass	$145.00	0.9	**K**
Deluxe, Chrome-Plated Brass	$233.80	1.3	**M**
Low Flow (1.5 gpm) (Chrome-Plated)	$364.60	2.5	**G**
Low Flow (1.5 gpm) (Chrome-Plated)	$289.60	0.5	**H**
Arm and Flange Kits			
Standard Arm and Flange	$107.80	0.3	**1**
Deluxe Arm and Flange	$165.70	0.4	**2**
Standard Arm/Flange & High Temp. Shut-Off	$344.20	0.6	**4**
Deluxe Arm/Flange & High Temp. Shut-Off	$406.20	0.7	**5**
Tub Spouts			
Diverter, Chrome-Plated Brass, 3/4" IPS	$347.80	1.2	**Q**
Non-Diverter, Chrome-Plated, 1/2" IPS	$155.50	0.4	**R**
Diverter, Chrome-Plated, 1/2" IPS	$186.20	0.7	**S**
Diverter, Chrome-Plated Brass, 1/2" IPS	$320.30	1.3	**T**
Diverter, Chrome-Plated, 1/2" Slip-fit	$203.50	1.0	**U**
Hand Shower Systems			
24" Chrome ADA Wall Grab Bar System	$1,520.00	4.7	**1**
36" Chrome ADA Wall Grab Bar System	$1,564.00	5.5	**2**
Standard, Hand Spray Push Button, CP Plastic, 2.50 gpm, Wall Mount, 3-Position, 2/Kit	$705.30	2.0	**5**
Standard, Hand Spray Push Button, CP Plastic, 2.50 gpm, Metal Hose, 24" Glide Rail	$921.20	2.6	**8**
Standard, Hand Spray Push Button, CP Plastic, 1.80 gpm WaterSense®, Metal Hose, 24" Glide Rail	$921.20	2.6	**8WS**
Standard, Hand Spray Push Button, CP Plastic, 2.50 gpm, Metal Hose, 30" Glide Rail	$1,241.00	3.1	**N**
Standard, Hand Spray Push Button, CP Plastic, 1.80 gpm WaterSense®, Metal Hose, 30" Glide Rail	$1,241.00	3.1	**NWS**
Professional, Hand Spray Push Button, White Plastic, 2.50 gpm, Metal Hose, 18" Glide Rail	$948.60	2.5	**P**
Professional, Hand Spray Push Button, White Plastic, 2.50 gpm, Metal Hose, 24" Glide Rail	$948.60	2.5	**7**
Professional, Hand Spray Push Button, White Plastic, 1.80 gpm WaterSense®, Metal Hose, 24" Glide Rail	$948.60	2.5	**7WS**
Deluxe, Hand Spray 5 Setting, CP Plastic, 2.50 gpm, Metal Hose, 24" Glide Rail	$1,486.00	3.2	**6**
Deluxe, Hand Spray 5 Setting, CP Plastic, 1.80 gpm WaterSense®, Metal Hose, 24" Glide Rail	$1,486.00	3.2	**6WS**
Deluxe, Hand Spray 5 Setting, CP Plastic, 2.50 gpm, Metal Hose, 30" Glide Rail	$1,778.00	3.3	**3**
Deluxe, Hand Spray 5 Setting, CP Plastic, 1.80 gpm WaterSense®, Metal Hose, 30" Glide Rail	$1,778.00	3.3	**3WS**
Low Flow (1.5 gpm), Hand Spray Pause, 4 Setting, CP Plastic, Metal Hose, 24" Glide Rail, WaterSense®	$1,442.00	3.2	**M**
Low Flow (1.5 gpm), Hand Spray Pause, 4 Setting, CP Plastic, Metal Hose, 30" Glide Rail, WaterSense®	$1,634.00	3.3	**L**
Diverters			
Concealed Diverting Valve, 1/2" IPS, Metal Handle	$763.40	3.0	**Y**
Diverter, Concealed, Deluxe ABS Handle	$814.90	3.0	**A**
Diverter, Concealed, Deluxe Metal Handle	$838.80	3.0	**B**
Exposed Diverter, Shower Arm-Type, Chrome-Plated	$245.00	0.5	**Z**
Vacuum Breakers			
Vacuum Breaker, Elevated, Chrome-Plated	$1,073.00	2.0	**V**
Vacuum Breaker, in-Line	$165.70	1.0	**W**

HydroGuard® T/P Series e420 Valves

All HydroGuard T/P® shower valves feature advanced thermal actuator compensate for both temperature and pressure fluctuations. A built-in adjustable metal-to-metal temperature limit stop reduces chance of accidental scalding due to the over adjustment of handle. Heavy cast brass body, integral checkstop, durable brass faceplate, lever-type handles, and corrosion-resistant material provide years of trouble-free
service. ASSE 1016 T/P listed and CSA B125 certified.

Model e420T12

Model e420T22

4 Ports concealed valves, 1/2" NPT inlets/outlets	Order Code	Weight	List Price
Color coded trim plate, Dome handle	**e420T12**	5.5	$2,753.00
Etched trim plate, Dome handle	**e420T22**	5.5	$2,753.00

4 Ports concealed valves, 1/2" Sweat inlets/outlets	Order Code	Weight	List Price
Color coded trim plate, Dome handle	**e420S12**	5.5	$2,753.00
Etched trim plate, Dome handle	**e420S22**	5.5	$2,753.00

Series e423 Thermostatic Valve

HydroGuard Series e423 Valves

Exposed thermostatic water mixing valve features advance thermal actuator, adjustable limit stop, polished chrome-plated lever handle and mounting bracket. ASSE 1016, CSA

Model e423320

e	4	2	3	3	2	

	List Price	Weight	Order Code
Valve			
e42332	$3,077.00	5.3	**e423**
Checkstops (Sold in Pairs)			
Straight, 1/2" IPS, Polished Chrome	$883.70	1.0	**B**
Angled with Strainer, 1/2" IPS, Polished Chrome	$1,262.00	2.4	**F**
Factory installation of checkstops (add suffix "X" to checkstop code) Min. order 10	$1,262.00	---	**X**

(Prices Effective 05/21/25)

e420 □□□□□□□□□

	List Price	Weight (lbs)	Order Code
Connections			
1/2" NPT Inlets/Outlets	$2,753.00	5.0	T
1/2" Sweat Inlets/Outlets	$2,753.00	5.0	S
Trim Plate			
Color Coded	N/C	—	1
Etched	N/C	—	2
Handle			
Dome	N/C	—	2
Showerheads			
Economizer, Chrome-Plated ABS, Adjustable	$69.70	0.5	J
Standard, Chrome-Plated Brass	$145.00	0.9	K
Deluxe, Chrome-Plated Brass	$233.80	1.3	M
Low Flow (1.5 gpm), Chrome-Plated	$364.60	2.5	G
Low Flow (1.5 gpm), Chrome-Plated	$289.60	0.5	H
Arm & Flange Kits			
Standard Arm & Flange	$107.80	0.3	1
Deluxe Arm & Flange	$165.70	0.4	2
Standard Arm/Flange & High Temp. Shut-Off	$344.20	0.6	4
Deluxe Arm/Flange & High Temp. Shut-Off	$406.20	0.7	5
Tub Spouts			
Diverter, Chrome-Plated Brass, 3/4" IPS	$347.80	1.2	Q
Non-Diverter, Chrome-Plated, 1/2" IPS	$155.50	0.4	R
Diverter, Chrome-Plated, 1/2" IPS	$186.20	0.7	S
Diverter, Chrome-Plated Brass, 1/2" IPS	$320.30	1.3	T
Diverter, Chrome-Plated, 1/2" Slip-fit	$203.50	1.0	U
Hand Shower Systems			
24" Chrome ADA Wall Grab Bar System	$1,520.00	4.7	1
36" Chrome ADA Wall Grab Bar System	$1,564.00	5.5	2
Standard, Hand Spray Push Button, CP Plastic, 2.50 gpm, Wall Mount, 3-Position, 2/Kit	$705.30	2.0	5
Standard, Hand Spray Push Button, CP Plastic, 2.50 gpm, Metal Hose, 24" Glide Rail	$921.20	2.6	8
Standard, Hand Spray Push Button, CP Plastic, 1.80 gpm WaterSense®, Metal Hose, 24" Glide Rail	$921.20	2.6	8WS
Standard, Hand Spray Push Button, CP Plastic, 2.50 gpm, Metal Hose, 30" Glide Rail	$1,241.00	3.1	N
Standard, Hand Spray Push Button, CP Plastic, 1.80 gpm WaterSense®, Metal Hose, 30" Glide Rail	$1,241.00	3.1	NWS
Professional, Hand Spray Push Button, White Plastic, 2.50 gpm, Metal Hose, 18" Glide Rail	$948.60	2.5	P
Professional, Hand Spray Push Button, White Plastic, 2.50 gpm, Metal Hose, 24" Glide Rail	$948.60	2.5	7
Professional, Hand Spray Push Button, White Plastic, 1.80 gpm WaterSense®, Metal Hose, 24" Glide Rail	$948.60	2.5	7WS
Deluxe, Hand Spray 5 Setting, CP Plastic, 2.50 gpm, Metal Hose, 24" Glide Rail	$1,486.00	3.2	6
Deluxe, Hand Spray 5 Setting, CP Plastic, 1.80 gpm WaterSense®, Metal Hose, 24" Glide Rail	$1,486.00	3.2	6WS
Deluxe, Hand Spray 5 Setting, CP Plastic, 2.50 gpm, Metal Hose, 30" Glide Rail	$1,778.00	3.3	3
Deluxe, Hand Spray 5 Setting, CP Plastic, 1.80 gpm WaterSense®, Metal Hose, 30" Glide Rail	$1,778.00	3.3	3WS
Low Flow (1.5 gpm), Hand Spray Pause, 4 Setting, CP Plastic, Metal Hose, 24" Glide Rail, WaterSense®	$1,442.00	3.2	M
Low Flow (1.5 gpm), Hand Spray Pause, 4 Setting, CP Plastic, Metal Hose, 30" Glide Rail, WaterSense®	$1,634.00	3.3	L
Diverters			
Concealed Diverting Valve, 1/2" IPS, Metal Handle	$763.40	3.0	Y
Diverter, Concealed, Deluxe ABS Handle	$814.90	3.0	A
Diverter, Concealed, Deluxe Metal Handle	$838.80	3.0	B
Exposed Diverter, Shower Arm-Type, Chrome-Plated	$245.00	0.5	Z
Vacuum Breakers			
Vacuum Breaker, Elevated, Chrome-Plated	$1,073.00	2.0	V
Vacuum Breaker, In-Line	$165.70	1.0	W

e427/e428 HydroGuard® Shower valves features advanced thermal actuator, adjustable handle rotation limit stop, stainless steel dial plate with concealed mounting screws, and color coded temperature graphics. ASSE 1016 listed CSA certified.

Model e427

Model e428

	List Price	Weight (lbs)	Order Code
Valves			
Concealed	$3,527.00	5.8	**e427†**
Exposed Chrome-Plated	$3,527.00	5.7	**e428†**
Checkstops (Sold in Pairs)			
Concealed Straight, 1/2" IPS	$299.70	1.1	**A**
Straight, 1/2" Sweat	$299.70	1.1	**C**
Angled, 1/2" Sweat	NLA	1.3	**D**
Angled, with Strainer, 1/2" IPS	$808.10	2.5	**E**
Exposed Straight, 1/2" IPS, Chrome-Plated	NLA	1.0	**B**
Angled, with Strainer, 1/2" IPS,	$1,262.00		
Chrome-Plated	$186.20	2.4	**F**
Factory installation of checkstops (Add suffix "X" to checkstop code) Min. order 10	$175.70	—	**X**
Showerheads			
Economizer, Chrome-Plated ABS, Adjustable	$69.70	0.5	**J**
Standard, Chrome-Plated Brass	$145.00	0.9	**K**
Deluxe, Chrome-Plated Brass	$233.80	1.3	**M**
Low Flow (1.5 gpm), Chrome-Plated	$364.60	2.5	**G**
Low Flow (1.5 gpm), Chrome-Plated	$289.60	0.5	**H**
Arm and Flange Kits			
Standard Arm and Flange	$107.80	0.3	**1**
Deluxe Arm and Flange	$165.70	0.4	**2**
Standard Arm/Flange & High Temp. Shut-Off	$344.20	0.6	**4**
Deluxe Arm/Flange & High Temp. Shut-Off	$406.20	0.7	**5**
Tub Spouts			
Diverter, Chrome-Plated Brass, 3/4" IPS	$347.80	1.2	**Q**
Non-Diverter, Chrome-Plated, 1/2" IPS	$155.50	0.4	**R**
Diverter, Chrome-Plated, 1/2" IPS	$186.20	0.7	**S**
Diverter, Chrome-Plated Brass, 1/2" IPS	$320.30	1.3	**T**
Diverter, Chrome-Plated, 1/2" Slip-fit	$203.50	1.0	**U**
Hand Shower Systems			
24" Chrome ADA Wall Grab Bar System	$1,520.00	4.7	**1**
36" Chrome ADA Wall Grab Bar System	$1,564.00	5.5	**2**
Standard, Hand Spray Push Button, CP Plastic, 2.50 gpm, Wall Mount, 3-Position, 2/Kit	$705.30	2.0	**5**
Standard, Hand Spray Push Button, CP Plastic, 2.50 gpm, Metal Hose, 24" Glide Rail	$921.20	2.6	**8**
Standard, Hand Spray Push Button, CP Plastic, 1.80 gpm WaterSense®, Metal Hose, 24" Glide Rail	$921.20	2.6	**8WS**
Standard, Hand Spray Push Button, CP Plastic, 2.50 gpm, Metal Hose, 30" Glide Rail	$1,241.00	3.1	**N**
Standard, Hand Spray Push Button, CP Plastic, 1.80 gpm WaterSense®, Metal Hose, 30" Glide Rail	$1,241.00	3.1	**NWS**
Professional, Hand Spray Push Button, White Plastic, 2.50 gpm, Metal Hose, 18" Glide Rail	$948.60	2.5	**P**
Professional, Hand Spray Push Button, White Plastic, 2.50 gpm, Metal Hose, 24" Glide Rail	$903.40	2.5	**7**
Professional, Hand Spray Push Button, White Plastic, 1.80 gpm WaterSense®, Metal Hose, 24" Glide Rail	$948.60	2.5	**7WS**
Deluxe, Hand Spray 5 Setting, CP Plastic, 2.50 gpm, Metal Hose, 24" Glide Rail	$1,486.00	3.2	**6**
Deluxe, Hand Spray 5 Setting, CP Plastic, 1.80 gpm WaterSense®, Metal Hose, 24" Glide Rail	$1,486.00	3.2	**6WS**
Deluxe, Hand Spray 5 Setting, CP Plastic, 2.50 gpm, Metal Hose, 30" Glide Rail	$1,778.00	3.3	**3**
Deluxe, Hand Spray 5 Setting, CP Plastic, 1.80 gpm WaterSense®, Metal Hose, 30" Glide Rail	$1,778.00	3.3	**3WS**
Low Flow (1.5 gpm), Hand Spray Pause, 4 Setting, CP Plastic, Metal Hose, 24" Glide Rail, WaterSense®	$1,442.00	3.2	**M**
Low Flow (1.5 gpm), Hand Spray Pause, 4 Setting, CP Plastic, Metal Hose, 30" Glide Rail, WaterSense®	$1,634.00	3.3	**L**
Diverters			
Concealed Diverting Valve, 1/2" IPS, Metal Handle	$763.40	3.0	**Y**
Diverter, Concealed, Deluxe ABS Handle	$814.90	3.0	**A**
Diverter, Concealed, Deluxe Metal Handle	$838.80	3.0	**B**
Exposed Diverter, Shower Arm-Type,Chrome-Plated	$245.00	0.5	**Z**
Vacuum Breakers			
Vacuum Breaker, Elevated, Chrome-Plated	$1,073.00	2.0	**V**
Vacuum Breaker, In-Line	$165.70	1.0	**W**

***For Shower or Bath only application. Not suitable for Combination Bath & Shower application**

(Prices Effective 05/21/25)

LEAD FREE*

HydroGuard® Series LFG480/LFE480 Lavatory Thermostatic Mixing Valves

Under the counter thermostatic mixer for lavatory applications.

ASSE 1070, cUPC, and NSF 61-9 & 372 listed. Integral checks. Solid brass construction.

Adjustable temperature with locking feature.

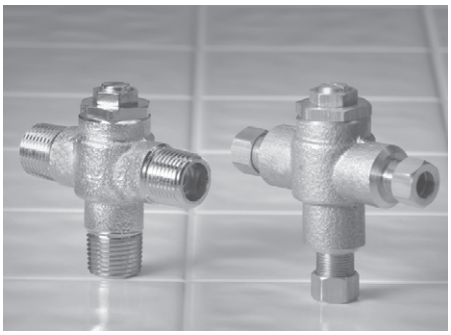

1070

Description	Order Code	Weight	List Price
1/2" NPT inlets and outlet, Minimum Flow 0.25gpm	LFG480-00Q	1.00	$889.50
1/2" NPT inlets and outlet, Minimum Flow 0.25gpm, Chrome Plated	LFG480-01Q	1.00	$1,040.00
3/8" Compression inlets & outlet, Minimum Flow 0.25gpm	LFG480-10Q	1.00	$889.50
3/8" Compression inlets & outlet, Minimum Flow 0.25gpm, Chrome Plated	LFG480-11Q	1.00	$1,040.00
3/8" Quick Connect, Minimum Flow 0.25gpm	LFG480-50	1.10	NLA
3/8" Quick Connect, Minimum Flow 0.25gpm, Chrome plated	LFG480-51	1.10	NLA
1/2" NPT inlets and outlet, Minimum Flow 0.5gpm	LFE480-00Q	1.00	$889.50
1/2" NPT inlets & outlet, Chrome Plated, Minimum Flow 0.5gpm	LFE480-01Q	1.00	$1,040.00
3/8" Compression inlets & outlet, Minimum Flow 0.5gpm	LFE480-10Q	1.00	$889.50
3/8" Compression inlets & outlet, Chrome Plated, Minimum Flow 0.5gpm	LFE480-11Q	1.00	$1,040.00
3/8" Quick Connect, Minimum Flow 0.5gpm	LFe480-50	1.08	NLA
3/8" Quick Connect, Chrome Plated, Minimum Flow 0.5gpm	LFe480-51	1.06	NLA

LEAD FREE*

HydroGuard® Series LFLM490

HydroGuard® Series LFLM490 Thermostatic Mixing Valves for Hot Water Heaters

All HydroGuard Series LFLM490 Valves feature advanced thermal actuator, adjustable lock-in handle design, solid brass construction and integral check valves and screens. ASSE 1017 Certified, IAPMO cUPC Certified and approved to CSA B125.3, NSF/ANSI/CAN 61 & NSF/ANSI/CAN 372 Certified.

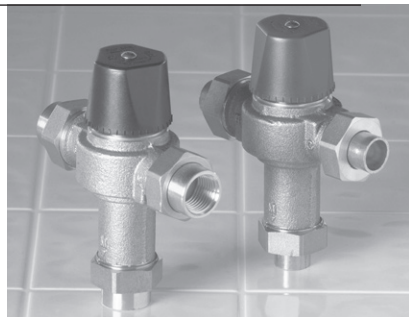

1017

Temperature Range 90°- 160°F (32° - 71°C) **Model LFLM49 ☐ ☐**

Temperature Range 60° - 120° F (16° - 49° C) **Model LFLM49 ☐-10 ☐**

Valve	List Price	Weight	Order Code
1/2"	$923.80	1.8	**0**
3/4"	$1,168.00	2.3	**1**
1"	$1,400.00 $538.00	2.9	**2**
Inlets/Outlets			
Union NPT Female	N/C	—	**1**
Union Sweat	N/C	—	**2**
Union CPVC	N/C	—	**3**
Union PEX	N/C	—	**4**
**Union PEX F1960 (CEF)	N/C	—	**6**
Quick-Connect			
1/2"	$168.90	—	**5**
3/4"	$244.70	—	**5**
1"	$284.90	—	**5**
With Press			
1/2"	$203.50	—	**1-w/Press**
3/4"	$241.50	—	**1-w/Press**
1"	$391.20	—	**1-w/Press**

**For sizes 1/2" and 3/4" standard temperature range only

*The wetted surface of this product contacted by consumable water contains less than 0.25% of lead by weight.

LEAD FREE*

HydroGuard® Series LFLM495 Thermostatic Mixing Valves for Individual Lavatory Installations

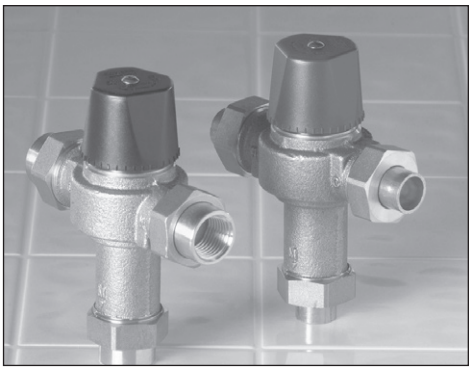

All HydroGuard® Series LFLM495 valves feature advanced thermal actuator, adjustable lock-in handle design, solid brass construction and integral check valves and screens. ASSE 1017, ASSE 1069, ASSE 1070 Certified, IAPMO cUPC Certified and Approved to CSA B125.3 and CSA B125.70, NSF/ANSI/CAN 61 & NSF/ANSI/CAN 372 Certified.

1017
1069
1070

Model LFLM49 ☐ - ☐

Temperature Range 80° - 120° F (27° - 49° C)

Valve	List Price	Weight	Order Code
1/2"	$976.90	1.8	5
3/4"	$1,234.00	2.3	6
1"	$1,453.00	2.9	7
Inlets/Outlets			
Union NPT Female	N/C	—	1
Union Sweat	N/C	—	2
Union CPVC	N/C	—	3
Union PEX	N/C	—	4
**Union PEX F1960 (CEF)	N/C	—	6
Quick-Connect			
1/2"	$172.70	—	5
3/4"	$244.30	—	5
1"	$291.70	—	5
With Press			
1/2"	$200.50	—	1-w/Press
3/4"	$244.30	—	1-w/Press
1"	$388.30	—	1-w/Press

**For sizes 1/2" and 3/4" only

Hot Water Tank Capacity Extender

The hot water tank capacity extender increases hot water capacity as much as 133% depending on storage and cold water temperature flow.

	List Price	Weight	Ordering Code
3/4" Inlets & Outlet	$1,445.00	3.0	LFLM496-HTK

*The wetted surface of this product contacted by consumable water contains less than 0.25% of lead by weight.

LEAD FREE*

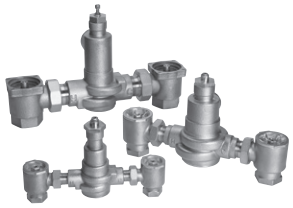

The HydroGuard® XP series LFMM430 is a temperature actuated mixing valve designed for use in hot water distribution system, in compliance with ASSE 1017 standard. Valve features advance paraffin actuation technology, dirt and lime resistant poppet and seat design and vandal resistant locking mechanism. Valve are available in two temperature ranges.

Valve	Rough Bronze		Chrome Plated	
	Standard (90-160°F)	Low (60-90°F)	Standard (90-160°F)	Low (60-90°F)
LFMM431 3/4 x 3/4	**LFMM431-10** $4,041.00	**LFMM431-30** $4,041.00	**LFMM431-20** $5,795.00	**LFMM431-40** $5,795.00
LFMM432 3/4 x 1	**LFMM432-10** $4,828.00	**LFMM432-30** $4,828.00	**LFMM432-20** $6,369.00	**LFMM432-40** $6,369.00
LFMM433 1 1/4 x 1 1/4	**LFMM433-10** $5,672.00	**LFMM433-30** $5,672.00	**LFMM433-20** $8,170.00	**LFMM433-40** $8,170.00
LFMM434 1 1/4 x 1 1/2	**LFMM434-10** $7,159.00	**LFMM434-30** $7,159.00	**LFMM434-20** $8,290.00	**LFMM434-40** $8,290.00
LFMM435 2 x 2	**LFMM435-10** $9,960.00	**LFMM435-30** $9,960.00	**LFMM435-20** $11,414.00	**LFMM435-40** $11,414.00

HydroGuard® XP Series LFMM430 Supply Fixtures

How to specify and order a supply fixture:

LF □□□□□ □□□□□□□

Valves (capacity at 45 psi) — **Order Code**
- 23 gpm (87 lpm) **LM490**
- 42 gpm (159 lpm) **MM431**
- 64 gpm (242 lpm) **MM432**
- 110 gpm (416 lpm) **MM433**
- 144 gpm (545 lpm) **MM434**
- 208 gpm (787 lpm) **MM435**

Valve and Pipe Finish
- Rough Bronze . . . . . **A**
- Chrome Plated . . . . . **C**

Piping Inlets/Outlets
- Top/Top . . . . . **D**
- Bottom/Top . . . . . **E**
- Bottom/Bottom . . . . . **F**
- Bottom/Side . . . . . **G**

Cabinet Style
- Exposed, no cabinet . . . . . **M**
- Stainless Steel, Recessed . . . . . **N**
- Stainless Steel, Semi-Recessed . . . . . **P**
- Stainless Steel, Wall Mounted . . . . . **Q**
- Painted, Recessed . . . . . **R**
- Painted, Semi-Recessed . . . . . **T**
- Painted, Wall Mounted . . . . . **U**

Temperature Range
- Standard—90°F to 160°F (32°C to 71°C) . . . . . **S**
- Low**—60°F to 90°F (16°C to 32°C) . . . . . **W**

Options
- None **0**
- Cold Water Bypass **2**
- Combination T/P Gauge on inlets **4**
- Cold Water Bypass & Combination T/P Gauge on inlets **6**

Alarm System (Not Installed)
- None **0**
- AquaSentry2 Alarm System **4**

View Port
- None **0**
- Window . . . . . **W**

** Not available with LFLM490.

Note: Supply fixtures are made to order (MTO) and are not returnable or subject to credit.

*The wetted surface of this product contacted by consumable water contains less than 0.25% of lead by weight.

LEAD FREE*

HydroGuard® XP Series LFMM430 Supply Fixtures

How to Determine the Price of a Supply Fixture

Determine the base price by looking in the first two columns of this chart, under "Valve and Pipe Finish." This price includes the valve and standard piping kit, dial thermometer, and a standard temperature range motor. If a cabinet, a high or low temperature motor or an optional piping kit is required, add the list price shown below to the base price.

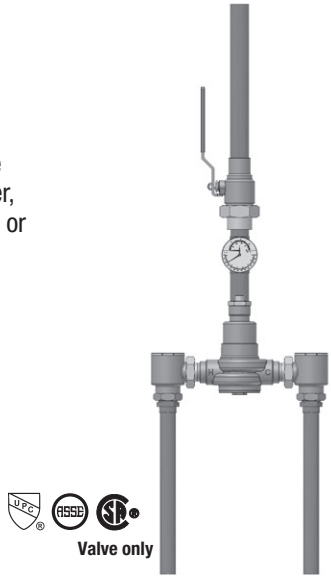

Model LFMM432AEMS00

	Valve and Pipe Finish		Cabinet Style	
	Rough Bronze	Chrome Plated	Stainless Steel	Painted
Order Code	A	C	N, P, Q	R, T, U
LFLM490	$4,770.00	$5,232.00	$4,904.00	$3,270.00
LFMM431	$7,120.00	$7,832.00	$6,090.00	$3,598.00
LFMM432	$8,603.00	$9,080.00	$6,090.00	$3,598.00
LFMM433	$9,992.00	$11,215.00	$6,090.00	$3,598.00
LFMM434	$12,063.00	$13,556.00	$6,090.00	$3,598.00
LFMM435	$15,983.00	$19,164.00	$7,273.00	$4,765.00

Options						Standard Items
Order Code	Cold Water Bypass	Combination T/P Gauge on Inlets	Cold Water Bypass & Comb. T/P Gauge on Inlets	AquaSentry2	View Port	Available at No Charge
	2	4	6	4	W	D, E, F, G, M, S
LFLM490	$2,426.00	$885.60	$3,299.00	$10,837.00	$662.40	N/C
LFMM431	$3,132.00	$1,090.00	$4,205.00	$10,922.00	$662.40	N/C
LFMM432	$3,619.00	$1,090.00	$4,704.00	$11,254.00	$662.40	N/C
LFMM433	$4,082.00	$1,316.00	$5,374.00	$11,479.00	$662.40	N/C
LFMM434	$4,601.00	$1,316.00	$5,895.00	$11,696.00	$662.40	N/C
LFMM435	$5,733.00	$1,639.00	$7,354.00	$14,491.00	$662.40	N/C

Note: Supply fixtures are made to order (MTO) and are not returnable or subject to credit.

*The wetted surface of this product contacted by consumable water contains less than 0.25% of lead by weight.

LEAD FREE*

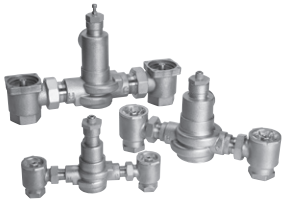

The HydroGuard® XP series LFSH1430 is a temperature actuated mixing valve designed for use in hot water distribution system, in compliance with ASSE 1017 standard. Valve features advanced paraffin actuation technology, dirt and lime resistant poppet and seat design and vandal resistant locking mechanism. Valve is available in two temperature ranges.

Valve	Valve Only			
	Rough Bronze		Chrome Plated	
	Standard (90-160°F)	Low (60-90°F)	Standard (90-160°F)	Low (60-90°F)
LFSH1432 3/4 x 1	**LFSH1432-10** $10,193.00	**LFSH1432-30** $10,193.00	**LFSH1432-20** $10,859.00	**LFSH1432-40** $10,859.00
LFSH1434 1 1/4 x 1 1/2	**LFSH1434-10** $14,559.00	**LFSH1434-30** $14,559.00	**LFSH1434-20** $15,395.00	**LFSH1434-40** $15,395.00
LFSH1435 2 x 2	**LFSH1435-10** $17,466.00	**LFSH1435-30** $17,466.00	**LFSH1435-20** $18,728.00	**LFSH1435-40** $18,728.00
	Valve w/Temperature/Pressure Gauge on Outlet\			
Valve	Rough Bronze		Chrome Plated\	
	Standard (90-160°F)	Low (60-90°F)	Standard (90-160°F)	Low (60-90°F)
LFSH1432 3/4 x 1	**LFSH1432-11** $10,863.00	**LFSH1432-31** $10,863.00	**LFSH1432-22** $11,656.00	**LFSH1432-42** $11,656.00
LFSH1434 1 1/4 x 1 1/2	**LFSH1434-13** $15,599.00	**LFSH1434-33** $15,599.00	**LFSH1434-24** $16,405.00	**LFSH1434-44** $16,405.00
LFSH1435 2 x 2	**LFSH1435-15** $18,807.00	**LFSH1435-35** $18,807.00	**LFSH1435-26** $19,791.00	**LFSH1435-46** $19,791.00

HydroGuard® XP Series LFSH1430 Supply Fixtures

How to specify and order a supply fixture:

LF □□□□□□ □ □ □ □ □ □ □ □

	SH1432	SH1434	SH1435	Order Code
Valve and Piping Finish				
Rough Bronze	$13,538.00	$19,313.00	$24,958.00	**A**
Chrome Plated	$15,404.00	$21,683.00	$28,411.00	**C**
Piping Inlets/Outlet				
Top/Top	N/C	N/C	N/C	**D**
Bottom/Top	N/C	N/C	N/C	**E**
Bottom/Bottom	N/C	N/C	N/C	**F**
Bottom/Side	N/C	N/C	N/C	**G**
Cabinet Style				
Exposed, no cabinet	N/C	N/C	N/C	**M**
Stainless Steel, Recessed	$7,683.00	$7,683.00	$7,683.00	**N**
Stainless Steel, Semi-Recessed	$7,683.00	$7,683.00	$7,683.00	**P**
Stainless Steel, Wall Mounted	$7,683.00	$7,683.00	$7,683.00	**Q**
Painted, Recessed	$4,546.00	$4,546.00	$6,022.00	**R**
Painted, Semi-Recessed	$4,546.00	$4,546.00	$6,022.00	**T**
Painted, Wall Mounted	$4,546.00	$4,546.00	$6,022.00	**U**
Temperature Range				
Standard—90˚F to 160°F (32˚F to 71°C)	N/C	N/C	N/C	**S**
Low—60˚F to 90°F (16˚F to 32°C)	N/C	N/C	N/C	**W**
Option				
None	N/C	N/C	N/C	**0**
Cold Water Bypass	$4,572.00	$5,813.00	$7,241.00	**2**
Combination T/P Gauge on Inlets	$1,377.00	$1,656.00	$2,066.00	**4**
Cold Water Bypass & Combination T/P Gauge on Inlets	$5,943.00	$7,441.00	$9,293.00	**6**
Alarm System (Not Installed)				
None	N/C	N/C	N/C	**0**
AquaSentry2 Alarm System	$11,942.00	$14,780.00	$18,310.00	**4**
View Port				
None	N/C	N/C	N/C	**0**
Window	$837.00	$837.00	$837.00	**W**

Note: Supply fixtures are made to order (MTO) and are not returnable or subject to credit.

*The wetted surface of this product contacted by consumable water contains less than 0.25% of lead by weight.

HydroGuard® LF Recirculation Loop with Automatic Balancing System

LEAD FREE*

The Lead Free HydroGuard® water tempering recirculating loop is an economical way to provide a safe, balanced system for stand alone master tempering valves. The system monitors return line temperature and automatically directs water to the cold side of the tempering valve (if within the set point) or to the hot water source (if below the set point).

Valve only

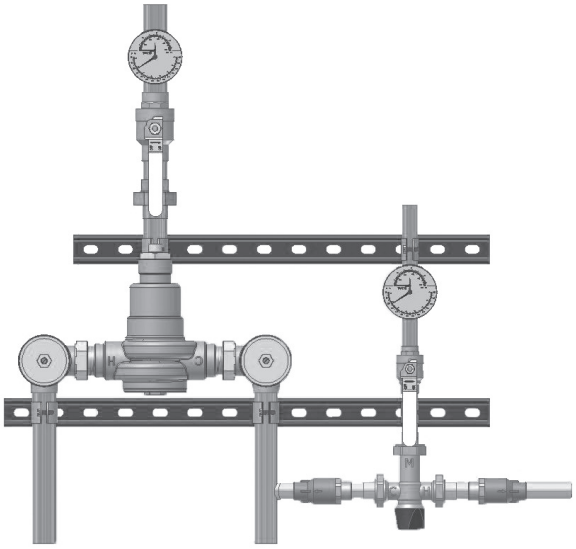

LF R ☐☐☐☐☐☐ **A** ☐☐☐

Valve Capacity @ 45 gpm	List Price	Order Code
42 gpm (159 lpm)	$12,730.00	**MM431**
64 gpm (242 lpm)	$13,969.00	**MM432**
110 gpm (416 lpm)	$16,074.00	**MM433**
144 gpm (545 lpm)	$18,511.00	**MM434**
208 gpm (787 lpm)	$22,553.00	**MM435**
57 gpm (216 lpm)	$16,554.00	**SH1432**
127 gpm (481 lpm)	$21,722.00	**SH1434**
201 gpm (761 lpm)	$25,754.00	**SH1435**
Valve & Piping Finish		
Rough Bronze	N/C	**A**
Return Size		
3/4"	N/C	**B**
1"	$921.90	**C**
Temperature Range		
Standard (90˚ - 160˚F)	N/C	**S**
Low (60˚ - 90˚F)	N/C	**W**
Alarm System (not installed)		
None	N/C	**0**
AquaSentry2 for LFMM431	$13,800.00	**1**
AquaSentry2 for LFMM432	$14,222.00	**2**
AquaSentry2 for LFMM433	$14,504.00	**3**
AquaSentry2 for LFMM434	$14,780.00	**4**
AquaSentry2 for LFMM435	$18,310.00	**5**
AquaSentry2 for LFSH1432	$11,942.00	**6**
AquaSentry2 for LFSH1434	$14,780.00	**7**
AquaSentry2 for LFSH1435	$18,310.00	**8**

Note: These products are specially made and are not returnable or subject to credit.

*The wetted surface of this product contacted by consumable water contains less than 0.25% of lead by weight.

LEAD FREE*

Hi/Lo Supply Fixtures

Hi/Lo Supply Fixtures include two master mixing valves, a pressure regulating valve, outlet thermometer, shutoff valve, and pressure gauges. Piping configuration is bottom inlets/top outlet. For other configurations, consult Powers Technical Support Department.

Valve only

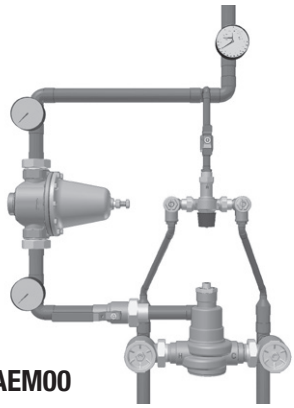

LFMM432HLAEM00

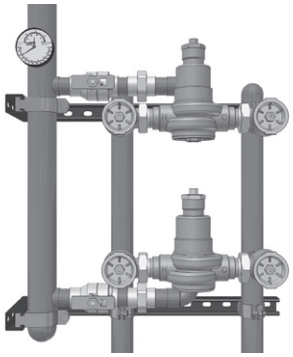

LFSH1434DVAEM00

LF ☐☐☐☐☐☐☐☐ ☐ ☐ ☐ ☐ ☐

Valve Configuration	Capacity	Inlets	Outlet	List Price	Order Code
LFLM490/LFMM431	0.5 - 65 gpm	3/4"	3/4"	$23,383.00	**MM431HL**
LFLM490/LFMM432	0.5 - 87 gpm	3/4"	1"	$25,432.00	**MM432HL**
LFLM490/LFMM433	0.5 - 133 gpm	1-1/4"	1-1/4"	$27,639.00	**MM433HL**
LFLM490/LFMM434	0.5 - 167 gpm	1-1/4"	1-1/2"	$29,842.00	**MM434HL**
LFMM431/LFMM434	3.0 - 186 gpm	1-1/4"	1-1/2"	$36,193.00	**MM435HL**
Larger Size					
LFMM434/LFSH1432	1.0 - 201 gpm	1-1/2"	2"	$37,304.00	**SH1432HL**
LFMM434/LFSH1434	1.0 - 271 gpm	2"	2-1/2"	$39,521.00	**SH1434HL**
LFSH1432/LFSH1434	2.0 - 184 gpm	1-1/2"	2"	$33,682.00	**SH1432DV**
LFSH1434/LFSH1434	2.0 - 251 gpm	2"	2-1/2"	$38,011.00	**SH1434DV**
LFSH1435/LFSH1435	10 - 402 gpm	4"	4"	$71,997.00	**SH1435DV**

Finish		
Rough Bronze	N/C	**A**
Piping Inlets/Outlet		
Bottom/Top	N/C	**E**
Top/Top	$1,281.00	**D**
Cabinet		
Exposed, No Cabinet	N/C	**M**
Stainless Steel, Recessed	$13,103.00	**N**
Stainless Steel, Wall Mounted	$13,103.00	**Q**
Painted, Recessed	$11,240.00	**R**
Painted, Wall Mounted	$11,240.00	**U**
Alarm (not installed)**		
None	N/C	**0**
AquaSentry2 for LFMM431	$13,800.00	**1**
AquaSentry2 for LFMM432	$14,222.00	**2**
AquaSentry2 for LFMM433	$14,504.00	**3**
AquaSentry2 for LFMM434	$14,780.00	**4**
AquaSentry2 for LFMM435	$14,780.00	**5**
AquaSentry2 for LFSH1432DV	$18,310.00	**6**
AquaSentry2 for LFSH1432HL	$18,310.00	**7**
View Port		
None	N/C	**0**
Window	$837.10	**W**

*The wetted surface of this product contacted by consumable water contains less than 0.25% of lead by weight.
**Not available with LFSH1434DV, LFSH1434HL & LFSH1435DV

Note: These products are specially made and are not returnable or subject to credit.

HydroGuard® XP High Capacity Systems Series LFSH1430

LEAD FREE*

Powers' High Capacity Systems are fully assembled and factory tested. They are designed to provide safe tempered water throughout commercial and institutional facilities. They consist of LFMM434 and LFSH1434 HydroGuard® XP thermostatic tempering valves. Each system includes ball valves, thermometers, pressure gauges, triple-duty check valves and PRV. Each system is supported by heavy-duty welded struts. Piping configuration is bottom inlets and top outlets.

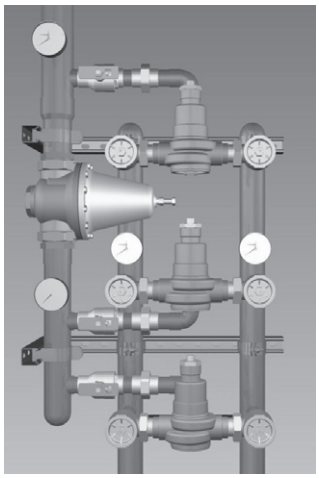

LFSH1434TVAEM0

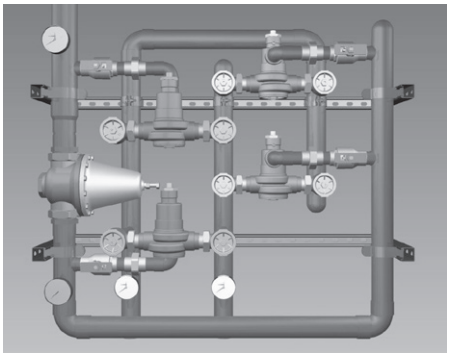

LFSH1434QVAEM0

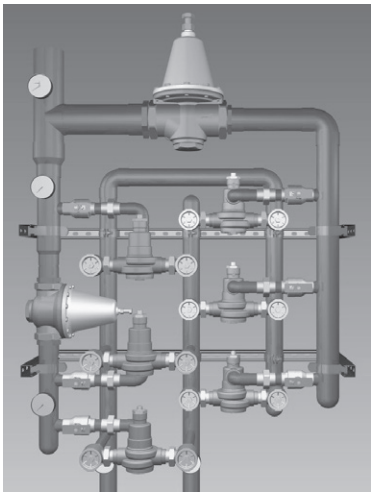

LF14346VAEM0

Valve only

LF □□□□ □□□□ □□□□

Valve Configuration	Capacity	Inlets	Outlet	List Price	Order Code
1- LFSH1434 & 2- LFMM434	1.0 - 416 gpm	2-1/2"	3"	Per Application Contact POWERS	SH1434TV
1- LFSH1434 & 3- LFMM434	1.0 - 559 gpm	2-1/2"	3"		SH1434QV
1- LFSH1434 & 5- LFMM434	1.0 - 847 gpm	2-1/2"	4"		SH14346V

Finish

Rough Bronze	N/C	**A**

Piping Inlets/Outlet

Bottom/Top	N/C	**E**

Cabinet

Exposed, No Cabinet	N/C	**M**
Stainless Steel, Wall Mounted	Per Application Contact Powers	**Q**
Painted, Wall Mounted		**U**

Alarm (Not Installed)

None	N/A	**0**

Note: These products are specially made and are not returnable or subject to credit.

*The wetted surface of this product contacted by consumable water contains less than 0.25% of lead by weight.

LEAD FREE*

With its IoT capabilities and certifications the IntelliStation® 2 is a smart next generation digital mixing valve solution that goes beyond just controlling the temperature of your water. It gives building owners and service contractors critical information on their valve's performance and their potable water system's condition in real time.

Locally or remotely monitor and control your water system with the color touch screen, or through the Nexa application which allows users with multiple sites or valves to monitor all their IntelliStation 2 mixing valves through a single interface. Setup a weekly schedule for energy savings or perform a timed sanitization of the water system to mitigate the risk of waterborne bacteria. Commissioning is quick and easy using the controller's new software wizard and the new street style plumbing connections allow for press or sweat connection of the valve.

Additional pre-piped options (IntelliStation 2S) offer more flexibility and serviceability to the owner and installer making Intellistation 2 a versatile solution with a long lifecycle.

Ordering Information

IS2 ☐☐☐ VL

Valve	Inlet	Outlet	List Price	Ordering Code
IS2075VL	¾"	1"	Contact POWERS	075
IS2100VL	1"	1¼"		100
IS2150VL	1½"	2"		150
IS2200VL	2"	2½"		200

1017

Valve Only

LISTED E365015
Temp. Ind. and Reg. Equip.

Control Only

Options IS2

SKU	Description	Contents	List Price
Expanded Monitoring of Hot & Cold Inlets and Mixed Outlet Temperatures and Pressures			
6555031	IS2 Digital Temperature and Pressure Expansion Kit	3 Sensors and cable	2,312.00
Extend the Distance Between Control and Valve			
6555011	IS2 6-foot Cable Extension Kit	Temp, encoder, and actuator cables	2,058.00
Keyence Clamp on Flow Meter Kits to Monitor Mixed Outlet and Recirculation Return Flows			
6555002	IS2 Flow Meter Kit, Pipe Size ½" – ¾"	1 Sensor, power adapter, and cable	7,284.00
6555003	IS2 Flow Meter Kit, Pipe Size 1" – 1¼"	1 Sensor, power adapter, and cable	7,284.00
6555004	IS2 Flow Meter Kit, Pipe Size 1½" – 2"	1 Sensor, power adapter, and cable	7,969.00
6555005	IS2 Flow Meter Kit, Pipe Size 2½" – 3"	1 Sensor, and cable	20,231.00
6555006	IS2 Flow Meter Kit, Pipe Size 4" – 5"	1 Sensor, and cable	30,408.00
Convert Standard Sweat/Press Connection to NPT			
6555007	IS2 Threaded Tailpiece KIT 075VL	2 Inlets and 1 mixed outlet NPT/Union connection	423.00
6555008	IS2 Threaded Tailpiece KIT 100VL	2 Inlets and 1 mixed outlet NPT/Union connection	433.30
6555009	IS2 Threaded Tailpiece KIT 150VL	2 Inlets and 1 mixed outlet NPT/Union connection	639.30
6555010	IS2 Threaded Tailpiece KIT 200VL	2 Inlets and 1 mixed outlet NPT/Union connection	1,992.00

POWERS™
A WATTS Brand

IntelliStation® 2S

LEAD FREE*

works with nexa

Pre-Piped System

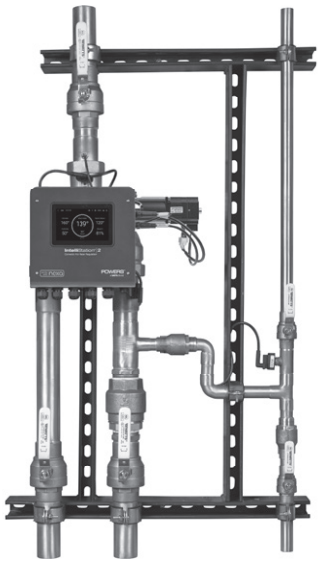

IS2S150C00LP

Ordering Information

IS2S □□□□ O □□□-H

SINGLE VALVE

Valve	Inlet	Outlet	List Price	Ordering Code
IS2075VL	1½"	2"	Per Application Contact Powers	075
IS2100VL	2"	2½"		100
IS2150VL	2"	3"		150
IS2200VL	2½"	4"		200

Return Pipe Size

1"	Available for IS2S075 and IS2S100	C
1½"	Available for all valves	E
2"	Available for IS2S150 and IS2S200	F

Strainers+

None	O
Inlet strainers	S

Pump

Less Pump	LP
Pump Assigned by Factory	--

Must Provide Following Pump Information to Factory to Select the Pump:

Pump Manufacturer: _____

Part/Model Number _____

System Head Loss _____

Required Flow to Maintain Recirculating Temperature _____

+Strainers ship loose and must be installed by a plumber at the job site.

ASSE 1017 · UPC · NSF Certified to NSF/ANSI/CAN 61 & 372

Valve Only

BTL · c UL us LISTED E365015 Temp. Ind. and Reg. Equip. · CE

Control Only

MULTI-VALVE

IS2S □□□□□□ O □□□-H

Valve	Inlet	Outlet	List Price	Ordering Code
IS2150VL	3"	4"	Per Application Contact Powers	150DV
IS2200VL	4"	6"		200DV
IS2200VL	4"	6"		200TV

Return Pipe Size

3"	H

Strainers

None	O
On inlets	S

Pump

Less Pump	LP
Pump Assigned by Factory	--

Must Provide Following Pump Information to Factory to Select the Pump:

Pump Manufacturer: _____

Part/Model Number _____

System Head Loss _____

Required Flow to Maintain Recirculating Temperature _____

(Prices Effective 05/21/25)

POWERS™
A WATTS Brand

OPTIONS IS2S

SKU	Description	Contents	List Price
Extend the Distance Between Control and Valve			
6555011	IS2 6-foot Cable Extension Kit	Temp, encoder, and actuator cables	2,058.00
Keyence Clamp on Flow Meter Kits to Monitor Mixed Outlet and Recirculation Return Flows			
6555002	IS2 Flow Meter Kit, Pipe Size ½" – ¾"	1 Sensor, power adapter, and cable	7,284.00
6555003	IS2 Flow Meter Kit, Pipe Size 1" – 1¼"	1 Sensor, power adapter, and cable	7,284.00
6555004	IS2 Flow Meter Kit, Pipe Size 1½" – 2"	1 Sensor, power adapter, and cable	7,969.00
6555005	IS2 Flow Meter Kit, Pipe Size 2½" – 3"	1 Sensor, and cable	20,231.00
6555006	IS2 Flow Meter Kit, Pipe Size 4" – 5"	1 Sensor, and cable	30,408.00

REPAIR AND REPLACEMENT KITS

SKU	Description	Contents	List Price
6555000	IS2 Controller Kit	Electronic control unit	6,105.00
6555001	IS2 System Digital Temperature and Pressure Expansion Kit	4 Sensors with cable (For use on pre-piped systems with 4 sensors)	2,847.00
6555012	IS2 Actuator Kit	Actuator/encoder, 4 bolts, and cables	5,023.00
6555013	IS2 Mix Temp Sensor Kit	Analog mix output temperature sensor and cable	259.60
6555014	IS2 Cap and Seat Kit 075VL to 150VL	2 Cap and seat assemblies and 8 bolts	734.90
6555015	IS2 Cap and Seat Kit 200VL	2 Cap and seat assemblies and 8 bolts	480.40
6555016	IS2 TP O-ring Kit 075VL to 100VL	3 O-rings (2 inlets and 1 outlet)	15.50
6555017	IS2 TP O-ring Kit 150VL	3 O-rings (2 inlets and 1 outlet)	17.80
6555018	IS2 TP O-ring Kit 200VL	3 O-rings (2 inlets and 1 outlet)	512.40
6555019	IS2 Actuator Cable Kit	Encoder and actuator cable	389.50
6555020	IS2 Check Repair Kit 075VL to 100VL	2 inlet check valves	160.00
6555021	IS2 Check Repair Kit 150VL	2 inlet check valves	807.60
6555022	IS2 Check Repair Kit 200VL	2 inlet check valves	1,518.00
6555023	IS2 TP Kit, IN 075VL	1 inlet connection ¾" union/street	143.40
6555024	IS2 TP Kit, OUT 075VL	1 outlet connection 1" union/street	79.80
6555025	IS2 TP Kit, IN 100VL	1 inlet connection 1" union/street	144.20
6555026	IS2 TP Kit, OUT 100VL	1 outlet connection 1¼" union/street	84.30
6555027	IS2 TP Kit, IN 150VL	1 inlet connection 1½" union/street	267.60
6555028	IS2 TP Kit, OUT 150VL	1 outlet connection 2" union/street	151.10
6555029	IS2 TP Kit, IN 200VL	1 inlet connection 2" union/street	693.20
6555030	IS2 TP Kit, OUT 200VL	1 outlet connection 2½" union/street	612.90
6555031	IS2 Valve Digital Temperature and Pressure Expansion Kit	3 Sensors with cable (For use on valves with 3 sensors)	2,312.00
6555032	IS2 SS Shuttle Small 075VL to 150VL	Stainless steel shuttle	404.10
6555033	IS2 SS Shuttle Large 200VL	Stainless steel shuttle	735.10

LEAD FREE*

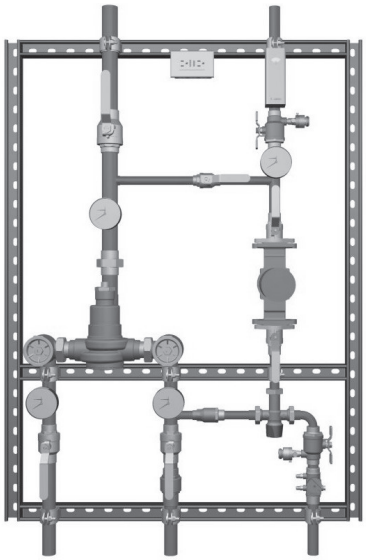

Shown with optional pump

PowerStation is a complete, fully assembled water tempering system, designed to provide safe tempered water throughout commercial and institutional facilities. PowerStation features the HydroGuard® XP LFMM430 or LFSH1430 tempering series valve with advanced thermal actuation technology. Each PowerStation is mounted on heavy-duty, welded struts and is factory tested as a complete system. Each PowerStation includes an engineer specified circulator, GFCI outlet, combination temperature/pressure gauges and Powers' triple-duty checkstops and internal bypass loop for fast and easy set-up. Optional equipment includes an Aquastat and/or Powers' exclusive automatic balancing valve.

Valve only

LF PS ☐ ☐ ☐ ☐ ☐ ☐

Valve	Capacity	Inlet	Outlet	List Price	Order Code
LFSH1432	1 - 57 gpm	3/4"	1"	Per Application Contract Powers	A
LFSH1434	1 - 127 gpm	1-1/4"	1-1/2"		B
LFSH1435	5 - 201 gpm	2"	2"		N
LFMM431	3 - 42 gpm	3/4"	3/4"		C
LFMM432	4 - 64 gpm	3/4"	1"		D
LFMM433	5 - 110 gpm	1-1/4"	1-1/4"		E
LFMM434	7 - 144 gpm	1-1/4"	1-1/2"		F
LFMM435	10 - 208 gpm	2"	2"		G

Controls

None. 0
Aquastat. . . . . A
Aqua Sentry® 2** . . . . . B
Aquastat & Aqua Sentry® 2** C

Balancing Valves

None. 0
Automatic Balancing Valve . . . . . B

Return Pipe Size

1/2" . . . . . A
3/4" . . . . . B
1". C
1-1/4" . . . . . D
1-1/2" . . . . . E
2". . . . . F

Assigned by Factory --

Pump Information:

Call Powers Technical Service at (888) 432-8932 for pump selection. You must provide the following information. Pump shall be lead free.

System Head Loss _____

Required Flow to Maintain Recirculating Temp._____

Note: These products are specially made and are not returnable or subject to credit.

*The wetted surface of this product contacted by consumable water contains less than 0.25% of lead by weight.
**Aqua Sentry® 2 - not installed

LEAD FREE*

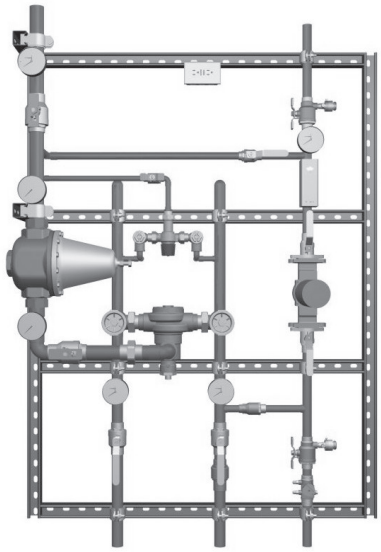

Shown with optional pump

PowerStation™ is a complete, fully assembled water tempering system, designed to provide safe tempered water throughout commercial and institutional facilities. PowerStation™ features the HydroGuard® XP LFLM490, LFMM430 and/or LFSH1430 tempering series valve with advanced thermal actuation technology. Each PowerStation™ is mounted on heavy-duty, welded struts and is factory tested as a complete system. It also includes an engineer specified circulator, GFCI outlet, combination temperature/pressure gauges, Powers' triple-duty checkstops and internal bypass loop for fast and easy set-up. Optional equipment includes an Aquastat and/or Powers' exclusive automatic balancing valve.

Valve only

LF PS ☐ ☐ ☐ ☐ ☐ ☐

Valve	Capacity	Inlets	Outlet	List Price	Order Code
LFMM431HL	0.5 - 65 gpm	3/4"	3/4"	Per Application Contact POWERS	H
LFMM432HL	0.5 - 87 gpm	3/4"	1"		J
LFMM433HL	0.5 - 133 gpm	1-1/4"	1-1/4"		K
LFMM434HL	0.5 - 167 gpm	1-1/4"	1-1/2"		L
LFMM435HL	3 - 186 gpm	1-1/4"	1-1/2"		M
LFSH1432HL	1 - 201 gpm	1-1/2"	2"		P
LFSH1434HL	1 - 271 gpm	2"	2-1/2"		Q
LFSH1432DV	2 - 184 gpm	1-1/2"	2"		S
LFSH1434DV	2 - 251 gpm	2"	2-1/2"		T
LFSH1434TV	1 - 416 gpm	2-1/2"	3"		W
LFSH1435DV	10 - 402 gpm	4"	4"		X

Controls

None	0
Aquastat	A
Aqua Sentry® 2**	B
Aquastat & Aqua Sentry® 2**	C

Balancing Valve

None	0
Automatic Balancing Valve	B

Return Pipe Size

1/2"	A
3/4"	B
1"	C
1-1/4"	D
1-1/2"	E
2"	F

Assigned by Factory --

Pump Information:

Call Powers Technical Service at (888) 432-8932 for pump selection. You must provide the following information. Pump shall be lead free.

System Head Loss _____

Required Flow to Maintain Recirculating Temp._____

Note: These products are specially made and are not returnable or subject to credit.

*The wetted surface of this product contacted by consumable water contains less than 0.25% of lead by weight.
**Aqua Sentry® 2 - not installed and not available on LFSH1434HL, LFSH1434DV, LFSH1434TV, LFSH1435DV.

HydroGuard® XP Emergency Tempering Valves with Cold Water Bypass

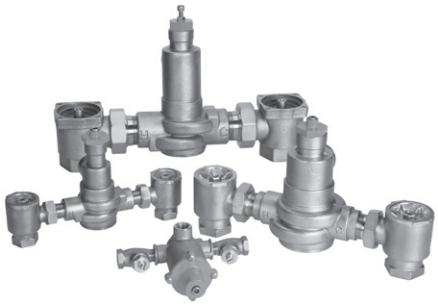

The HydroGuard® XP Emergency Tempering valves, with cold water bypass, are designed to use with emergency fixtures in compliance with ANSI Z358.1 2014 and are ASSE 1071 listed. Valves feature advanced paraffin actuation technology, dirt and lime resistant poppet and seat design and vandal resistant locking mechanism. Valves are available in two finishes.

	Valve Only	
Valve	**Rough Bronze**	**Chrome Plated**
ES150 1/2 x 1/2	**ES150-10** $2,954.00	**ES150-20** $3,317.00
ETV200 3/4 x 1	**ETV200-10** $4,643.00	**ETV200-20** $5,194.00
ETV400 1 1/4 x 1 1/2	**ETV400-10** $7,230.00	**ETV400-20** $7,919.00
ETV500 2 x 2	**ETV500-10** $9,857.00	**ETV500-20** $10,769.00

	Valve w/Temperature/Pressure Gauge on Outlet	
Valve	**Rough Bronze**	**Chrome Plated**
ES150 1/2 x 1/2	**ES150-11** $3,072.00	**ES150-22** $3,495.00
ETV200 3/4 x 1	**ETV200-13** $5,241.00	**ETV200-24** $5,421.00
ETV400 1 1/4 x 1 1/2	**ETV400-15** $7,562.00	**ETV400-26** $8,624.00
ETV500 2 x 2	**ETV500-17** $10,317.00	**ETV500-28** $11,234.00

HydroGuard® XP Emergency Tempering Valves with Cold Water Bypass

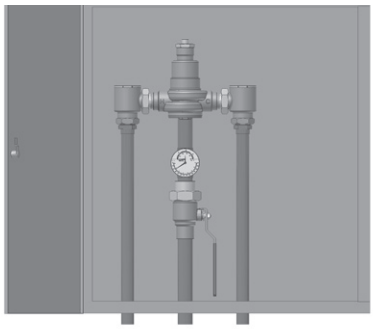

The HydroGuard® XP Emergency Tempering valves, with cold water bypass, are designed to use with emergency fixtures in compliance with ANSI Z358.1 2004 and are ASSE 1071 listed. Valves feature advanced paraffin actuation technology, dirt and lime resistant poppet and seat design and vandal resistant locking mechanism. Valves are available in two finishes.

Valve Only

	ES150	ETV200	ETV400	ETV500	Ordering Code
Valve and Piping Finish					
Rough Bronze	$4,451.00	$7,013.00	$10,709.00	$12,313.00	**A**
Chrome Plated	$5,087.00	$8,174.00	$13,018.00	$14,465.00	**B**
Piping Inlets/Outlet					
Top/Top	N/C	N/C	N/C	N/C	**D**
Top/Bottom	N/C	N/C	N/C	N/C	**M**
Bottom/Top	N/C	N/C	N/C	N/C	**E**
Bottom/Bottom	N/C	N/C	N/C	N/C	**F**
Bottom/Side	N/C	N/C	N/C	N/C	**G**
Cabinet Style					
Exposed, no cabinet	N/C	N/C	N/C	N/C	**0**
Stainless Steel, Recessed	$4,354.00	$7,493.00	$7,493.00	$8,945.00	**N**
Stainless Steel, Semi-Recessed	$4,354.00	$7,493.00	$7,493.00	$8,945.00	**P**
Stainless Steel, Wall Mounted	$4,354.00	$7,493.00	$7,493.00	$8,945.00	**Q**
Painted, Recessed	$3,635.00	$4,428.00	$4,428.00	$5,864.00	**R**
Painted, Semi-Recessed	$3,635.00	$4,428.00	$4,428.00	$5,864.00	**T**
Painted, Wall Mounted	$3,635.00	$4,428.00	$4,428.00	$5,864.00	**U**
Option					
None	N/C	N/C	N/C	N/C	**0**
T/P Gauge on Inlets	$825.20	$1,018.00	$1,228.00	$1,534.00	**5**
Alarm System (not installed)					
None	N/C	N/C	N/C	N/C	**0**
AquaSentry2	$13,246.00	$13,849.00	$14,394.00	$17,833.00	**4**
View Port					
None	N/C	N/C	N/C	N/C	**0**
Window	$814.90	$814.90	$814.90	$814.90	**W**

Note: These products are made to order (MTO) and are not returnable or subject to credit.

Hydropanel II Modular Shower Systems with e700 T/P Series Valve

Hydropanel II Shower Systems are constructed from stainless steel. They feature HydroGuard T/P Series e700 combination mixing valves with ABS or Metal handles, vandal-resistant fasteners, color-coded graphics, end caps, and are factory-tested and pre-assembled.

Valve Only

Model 4507100

Model 4507054

Hydropanel II with e705 Combination Mixing Valves with ABS Handles

Description	Order Code	Weight (lbs.)	List Price
Fixed Showerhead and Soap Dish	**4507050**	15.0	$4,323.00
Fixed Showerhead, less Soap Dish	**4507051**	14.0	$4,323.00
Swivel Showerhead and Soap Dish	**4507052**	15.0	$4,323.00
Swivel Showerhead, less Soap Dish	**4507053**	14.0	$4,323.00
Professional Hand Shower, Glide Rail, VB and Soap Dish	**4507054**	17.0	$5,217.00
Professional Hand Shower, Glide Rail, VB, less Soap Dish	**4507055**	16.0	$5,217.00
Deluxe Hand Shower, Glide Rail, VB and Soap Dish	**4507056**	18.0	$5,383.00
Deluxe Hand Shower, Glide Rail, VB, less Soap Dish	**4507057**	17.0	$5,383.00
Professional Hand Shower, Glide Rail, VB, Fixed Showerhead and Soap Dish	**4507058**	18.0	$7,519.00
Professional Hand Shower, Glide Rail, VB, Swivel Showerhead and Soap Dish	**4507059**	19.0	$7,519.00

Hydropanel II with e710 Combination Mixing Valves with Metal Handles

Description	Order Code	Weight (lbs.)	List Price
Fixed Showerhead and Soap Dish	**4507100**	15.0	$4,403.00
Fixed Showerhead, less Soap Dish	**4507101**	14.0	$4,403.00
Swivel Showerhead and Soap Dish	**4507102**	15.0	$4,403.00
Swivel Showerhead, less Soap Dish	**4507103**	14.0	$4,403.00
Professional Hand Shower, Glide Rail, VB and Soap Dish	**4507104**	17.0	$5,296.00
Professional Hand Shower, Glide Rail, VB, less Soap Dish	**4507105**	16.0	$5,296.00
Deluxe Hand Shower, Glide Rail, VB and Soap Dish	**4507106**	18.0	$5,459.00
Deluxe Hand Shower, Glide Rail, VB, less Soap Dish	**4507107**	17.0	$5,459.00
Professional Hand Shower, Glide Rail, VB, Fixed Showerhead and Soap Dish	**4507108**	18.0	$7,594.00
Professional Hand Shower, Glide Rail, VB, Swivel Showerhead and Soap Dish	**4507109**	19.0	$7,594.00

ADA compliant (Prices Effective 05/21/25)

Hydropanel II Modular Shower Systems

Hydropanel II Shower Systems are constructed from stainless steel. They feature a pressure balance or thermostatic mixing valve with metal lever handle, vandal-resistant fasteners, color-coded graphics, end caps, and are factory-tested and pre-assembled.

Model 4504002

Model 4504210E

Model 4500416P

Hydropanel II with Biltmore 900 Pressure Balancing Valve	Order Code	Weight (lbs.)	List Price
Hydropanel II with Fixed Showerhead and Soap Dish	**4504000**	15.0	$4,119.00
Hydropanel II with Fixed Showerhead, less Soap Dish	**4504001**	14.0	$4,119.00
Hydropanel II with Swivel Showerhead and Soap Dish	**4504002**	15.0	$4,119.00
Hydropanel II with Swivel Showerhead, less Soap Dish	**4504003**	14.0	$4,119.00
Hydropanel II with Professional Hand Shower, Glide Rail, VB and Soap Dish	**4504004**	17.0	$4,986.00
Hydropanel II with Professional Hand Shower, Glide Rail, VB, less Soap Dish	**4504005**	16.0	$4,986.00
Hydropanel II with Deluxe Hand Shower, Glide Rail, VB and Soap Dish	**4504006**	18.0	Add: $5,217.17
Option: Metering Valve Only	Suffix **M**		Add: $1,504.80
Metering Valve with Pressure Balancing	Suffix **MP**		$2,209.00
Hydropanel II with HydroGuard PB410 Pressure Balancing Valve			
Hydropanel II with Fixed Showerhead and Soap Dish	**4500416P**	15.0	$4,920.00
Hydropanel II with Fixed Showerhead, less Soap Dish	**4500417P**	14.0	$4,920.00
Hydropanel II with Swivel Showerhead and Soap Dish	**4500418P**	15.0	$4,920.00
Hydropanel II with Swivel Showerhead, less Soap Dish	**4500419P**	14.0	$4,920.00
Hydropanel II with Hand Shower VB and Soap Dish	**4500420P**	17.0	$5,801.00
Hydropanel II with Hand Shower, VB, less Soap Dish	**4500421P**	16.0	$5,801.00
Hydropanel II with Diverter, Deluxe Hand Shower, VB, Fixed Showerhead, and Soap Dish	**4504104P**	17.0	$10,505.00
Hydropanel II with HydroGuard e420 Thermostatic Mixing Valve			
Hydropanel II with Fixed Showerhead and Soap Dish	**4504210E**	15.0	$5,734.00
Hydropanel II with Fixed Showerhead, less Soap Dish	**4504211E**	14.0	$5,734.00
Hydropanel II with Swivel Showerhead and Soap Dish	**4504212E**	15.0	$5,734.00
Hydropanel II with Swivel Showerhead, less Soap Dish	**4504213E**	14.0	$5,734.00
Hydropanel II with Hand Shower VB and Soap Dish	**4504214E**	17.0	$6,627.00
Hydropanel II with Hand Shower, VB, less Soap Dish	**4504215E**	16.0	$6,627.00

Hydropanel II Dual Shower with Diverter	Order Code	Weight (lbs.)	List Price
Hydropanel II with Diverter, Deluxe Hand Shower, VB, Fixed Showerhead and 900 Series Pressure Equalizing Valve, Soap Dish ♿	**4504103**	22.0	$8,574.00

Hydropanel II Tub/Shower with Biltmore 900 Pressure Balancing Valve			
Hydropanel II with Fixed Showerhead, Diverter Spout and 900 Series Pressure Equalizing Valve with Soap Dish	**4504031**	22.0	$6,634.00

Hydropanel II Modular Shrouding System			
Horizontal Adaptor Kit, 16"	**4504040**	3.8	$789.20
Horizontal Adaptor Kit, 24"	**4504041**	6.9	$746.10
Horizontal Adaptor Kit, 48"	**4504042**	13.0	$1,071.00
Overlay Shroud Kit, 8"	**4504043**	1.6	$521.40
Overlay Shroud Kit, 13"	**4504044**	2.6	$546.50
Overlay Shroud Kit, 16"	**4504045**	3.7	$589.30
Overlay Shroud Kit, 18"	**4504046**	4.2	$624.60
Overlay Shroud Kit, 23"	**4504047**	6.4	$671.00
Overlay Shroud Kit, 28"	**4504048**	5.5	$713.40
Extension Shroud Kit, 6"	**4504050**	1.6	$510.70
Extension Shroud Kit, 24"	**4504051**	4.2	$671.00
Corner Shroud Kit, 10"	**4504049**	2.2	$542.70
Corner MTG Kit	**4500430**	1.0	NLA
Corner End Cap	**4504015**	0.7	NLA
End Cap Kit	**4504011**	0.1	$143.20

See page 31 for ESP™ Infrared and Piezo Proximity Hydropanel Systems.

ADA compliant (Prices Effective 05/21/25)

HydroGuard® ESP Infrared Showers

Powers ESP Infrared Showers are supplied complete with the sensor assembly, 24 VAC solenoid valve, modular junction box and mounting hardware. Optional box mount or plug-in transformer available. Hand showers and diverters are optional as well.

HydroGuard® Piezo Sensor Showers

Powers ESP Piezo Showers are supplied complete with 24 VAC solenoid valve, installation kit, and control box. Optional box-mount or plug-in transformer available. (Piezo shower is also available for multiple shower applications.)

ADA compliant

447– ☐ 0 0 ☐ ☐ ☐ ☐ ☐ ☐

Sensor	List Price	Order Code
Infrared	$5,813.00	1
Piezo		
for wall depth 0–.25"	NLA	3
for wall depth .26"–1.5"	$4,533.00	4
for wall depth 1.6"–4.5"	$4,586.00	5
for wall depth 4.6"–6.5"	$4,768.00	6
for wall depth 6.6"–8.5"	$4,879.00	7
Transformer (Order separately-See below)		
None	N/C	00
Control Box		
Individual Control (For Piezo)	N/C	IC
Less Box (For Infrared)	N/C	00
Showerhead		
None	N/C	00
Adj. Brass/Arm and Flange	$248.20	K1
Adj. Brass/Arm and Flange	$337.70	M1
Institutional (141 381)	NLA	N0
Institutional (141 868)	$1,035.00	P0
Institutional (141903A)	$883.70	Q0
Institutional (141903B)	$969.70	R0
Institutional (141903C)	$883.70	S0
Hand Shower		
None	N/C	0
Deluxe (141 163) w/VB (141 319)	$1,652.00	6
Standard (141 827) w/VB (141 319)	$1,087.00	8
Diverter		
None	N/C	0
Concealed (141600B)	$763.40	Y
Concealed (141600E)	$814.90	A
Concealed (141600F)	$838.80	B
Transformer (Powers up to 1 solenoid)		
Box (444 119)	$457.60	

Hydropanel ESP Infrared Showers

Powers Hydropanel ESP Infrared Showers are supplied complete with the sensor assembly and 24 VAC solenoid valve pre-piped in a stainless steel shroud. Modular junction box and mounting hardware included, as well as optional box mount or plug-in 24 VAC transformer.

Hydropanel ESP Piezo Showers

Powers Hydropanel ESP Piezo Showers are supplied complete with the assembly, proximity sensor assembly, and 24 VAC solenoid valve, pre-piped in a stainless steel shroud. Control box and mounting hardware included.

ADA compliant

450– □ 0 0 □ □ □ □ □ □

	List Price	Order Code
Sensor		
Infrared	$10,584.00	1
Piezo	$8,510.00	2
Transformer (Order separately-See below)		
None	N/C	00
Control Box		
Individual Control (Push Button)	N/C	IC
Less Box (Infrared only)	N/C	00
Showerhead		
Fixed Head	N/C	03
Swivel Head	N/C	04
Professional Hand Shower (141 318) w/VB (141 319)	$1,115.00	07
Deluxe Hand Shower (141 163) w/VB (141 319)	$1,652.00	06
Standard Hand Shower (141 827) w/VB (141 319)	$1,087.00	08
Fixed Head, Standard Hand Shower, VB (141 319) and Diverter (141600B)	$1,972.00	10
Fixed Head, Deluxe Hand Shower, VB (141 319) and Diverter (141600B)	$2,416.00	12
Soap Dish		
With Soapdish	N/C	WD
Less Soapdish	N/C	LD
Transformer (Powers up to 1 solenoid)		
Box (444 119)	$457.60	

LEAD FREE*

Aqua Sentry® 2 Series LF460 Alarm System

Audibly and visibly warns and shuts down supply if water temperature exceeds high or low set-points.

AquaSentry 2 Alarm System, complete

Includes the AquaSentry 2 control module, temperature sensor with phone-style jack, sensor junction box, 4 x 4 electrical box, UL/CSA approved 24 VAC, class 2 transformer, and 25 feet of station cable.

Model	Order Code	Weight	List Price
LF4600150	**0123789**	8.0 lbs.	$4,931.00

Motorized Ball Valve, cable, and shock absorber must be ordered separately. See below.

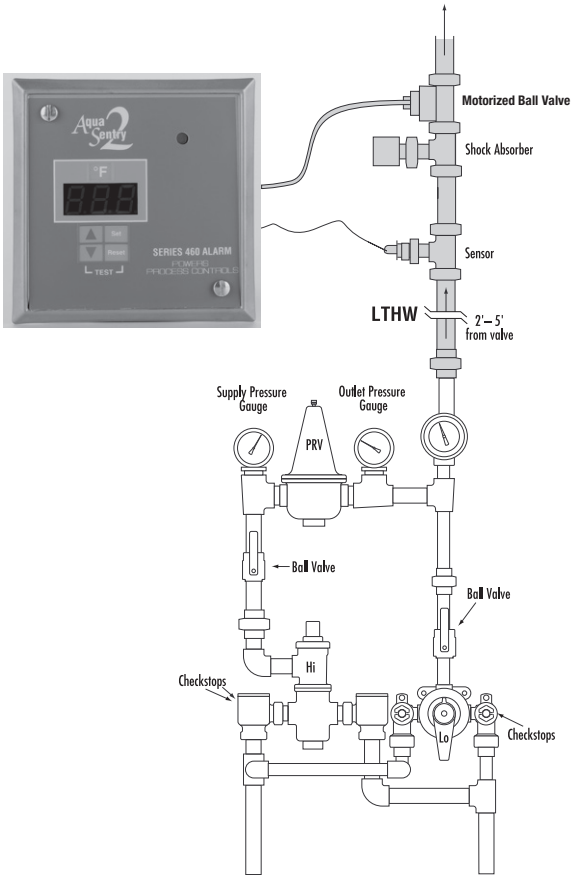

Accessories for AquaSentry 2

Motorized Ball Valves - 24 VAC

	Order Code	Weight	List Price
1/2"	**0123835**	9 lbs.	$5,529.00
3/4"	**0123839**	10 lbs.	$5,640.00
1"	**0123843**	11 lbs.	$6,044.00
1-1/4"	**0123847**	11 lbs.	$6,306.00
1-1/2"	**0123850**	12 lbs.	$6,586.00
2"	**0123853**	14 lbs.	$9,997.00

Cable

Telephone station cable

Order Code	List Price
460 339	$9.47/foot

Shock Absorber

1" NPT, stainless steel, nitrogen-charged.

Order Code	Weight	List Price
460 353	1.0 lbs.	$2,525.00

Components

460 602	AquaSentry 2 Transformer, Class 2, 24 VAC, UL/CSA-approved, 4 lbs.	$647.20
460 601	Temperature Sensor with Phone Jack	$1,489.00

*The wetted surface of this product contacted by consumable water contains less than 0.25% of lead by weight.

Fotoguard and Fotopanel Series 440

For precise control of water temperature for photographic processing.

Fotoguard

Fotopanel

Fotoguard

Description	Order Code	Capacity	Outlets	Weight	List Price
Concealed—Stainless steel faceplate with temperature indication, volume control, inlet strainer checkstops.	**4401550**	1–6 gpm	1/2"	7.5 lbs.	$5,533.00
Exposed—Chrome-plated finish, inlet strainer checkstops, volume control.	**4401500**	1–6 gpm	1/2"	7.8 lbs.	$7,565.00
	4401510	5–14 gpm	1/2"	9.5 lbs.	$8,441.00
Fotopanel					
Stainless steel cabinet includes T/P valve, temperature adjustment, inlet strainer checkstops, On/Off valve, volume control, dial thermometer, vacuum breaker.	**4401000**	1–6 gpm	1/2"	17.0 lbs.	$12,681.00
	4403000	5–14 gpm	1/2"	21.0 lbs.	$15,902.00
Same as 440-1000 with recessed cabinet.	**4401020**	1–6 gpm	1/2"	17.0 lbs.	$15,347.00
Optional temperature ranges; add appropriate suffix code.	40° to 90°F	Suffix code: **W**			Add: $666.37
	120° to 175°F	Suffix code: **V**			Add: $666.37

High Temperature Shutoff Device	Type	Order Code	Weight (lbs.)	List Price
Shower high temperature shut-off device used between shower arm and shower head 115°F limit. Automatic reset. ASSE 1062 listed	—	**HT115**	0.3	$238.00

A,C

B

D

F

Checkstops (sold in pairs)	Type	Order Code	Weight (lbs.)	List Price
Straight, 1/2" IPS, Concealed	A	**141 176**	1.1	$299.70
Straight, 1/2" IPS, Exposed, Polished Chrome	B	**141 177**	1.0	$883.70
Straight, 1/2" Sweat, Concealed	C	**141 187**	1.1	$299.70
Angled, 1/2" Sweat, Concealed	D	**141 326**	1.3	NLA
Angled, with Strainer, 1/2" IPS, Concealed	E	**230 046**	2.5	$808.10
Angled, with Strainer, 1/2" IPS, Exposed, Polished Chrome	F	**230 048**	2.4	$1,262.00
Straight, 1/2" IPS, Rough Chrome	G	**141 307**	1.1	NLA

J

K

M

Showerheads	Type	Order Code	Weight (lbs.)	List Price
Economizer, Chrome-Plated ABS, Adjustable	J	**141 371**	0.5	$69.70
Standard, Chrome-Plated Brass, Adjustable	K	**141 377**	0.7	$145.00
Large, Chrome-Plated Brass, Adjustable	M	**141 376**	1.1	$233.80
Low Flow (1.6 gpm) Shower Head, Chrome-Plated	G	**141 800**	2.5	$364.60
Low Flow (1.5 gpm) Shower Head, Chrome-Plated	H	**141 801**	0.5	$289.60
Massage Showerhead, Polished Chrome	—	**141 803**	0.9	NLA
Adjustable, Brass Ball Joint Showerhead, Polished Chrome	—	**141 353**	1.5	NLA
Standard, Chrome-Plated Brass, Adjustable, 1/2" Male Thread	—	**141 378**	0.7	$220.80
Large, Chrome-Plated Brass, Adjustable, 1/2" Male Thread	—	**141 379**	1.1	$310.20

141 868

141 816/141 817

141903A/B

141903C/D

Institutional Showerheads	Type	Order Code	Weight (lbs.)	List Price
30° Fixed Head with Screwed/Sweat Connections	—	**141 381**	3.1	NLA
Wall-Mounted, 25°, Fixed Head with 5° Adjustment Feature, Vandal-Resistant	—	**141 868**	2.0	$1,035.00
Fixed Showerhead, Adjustable Spray, Chrome-Plated, Brass	—	**141 816**	1.0	$687.50
Fixed Showerhead, Adjustable Spray, Chrome-Plated, Brass, 1.5gpm	—	**141 817**	1.0	$687.50
Small Ball Joint Shower Head with Wall Bracket, Anchor Plate, and Adjustable Spray, Chrome Plated, Brass	—	**141903A**	3.0	$883.70
Large Ball Joint Shower Head with Wall Bracket, Anchor Plate, and Adjustable Spray, Chrome Plated, Brass	—	**141903B**	3.2	$969.70
Fixed Showerhead with Wall Bracket, Anchor Plate, and Adjustable Spray, Chrome-Plated, Brass	—	**141903C**	2.7	$883.70
Fixed Showerhead with Wall Bracket, Anchor Plate, and Adjustable Spray, Chrome-Plated, Brass, 1.5 gpm	—	**141903D**	2.7	$883.70

Arm and Flange Kits	Type	Order Code	Weight (lbs)	List Price
Standard Arm and Flange	1	**141 399**	0.3	$107.80
Deluxe Arm and Flange (with set screw on flange)	2	**141 198**	0.4	$165.70

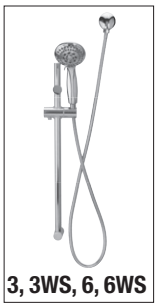

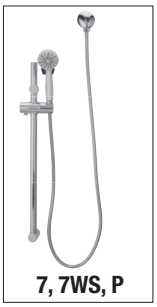

Hand Shower Systems	Type	Order Code	Model/Part No.	Weight	List Price
24" Stainless Steel ADA Wall Grab Bar with Shower System	1	**141 174**	141 174	4.7	$1,520.00
36" Stainless Steel ADA Wall Grab Bar with Shower System	2	**141 175**	141 175	5.5	$1,564.00
Standard, Hand Spray Push Button, CP Plastic, 2.50 gpm, Metal Hose, Wall Mount, 3-Position, 2/Kit	5	**6551722**	141 161N	2.0	$705.30
Standard, Hand Spray Push Button, CP Plastic, 2.50 gpm, Metal Hose, 24" Glide Rail	8	**6551723**	141 827N	2.6	$921.20
Standard, Hand Spray Push Button, CP Plastic, 1.80 gpm WaterSense®, Metal Hose, 24" Glide Rail	8WS	**6551724**	141 827WS	2.6	$921.20
Standard, Hand Spray Push Button, CP Plastic, 2.50 gpm, Metal Hose, 30" Glide Rail	N	**6551725**	141 879N	3.1	$1,241.00
Standard, Hand Spray Push Button, CP Plastic, 1.80 gpm WaterSense®, Metal Hose, 30" Glide Rail	NWS	**6551726**	141 879WS	3.1	$1,241.00
Professional, Hand Spray Push Button, White Plastic, 2.50 gpm, Metal Hose, 18" Glide Rail	P	**6551735**	141 837N	2.5	$948.60
Professional, Hand Spray Push Button, White Plastic, 2.50 gpm, Metal Hose, 24" Glide Rail	7	**6551733**	141 318N	2.5	$948.60
Professional, Hand Spray Push Button, White Plastic, 1.80 gpm WaterSense®, Metal Hose, 24" Glide Rail	7WS	**6551734**	141 318WS	2.5	$948.60
Deluxe, Hand Spray 5 Setting, CP Plastic, 2.50 gpm, Metal Hose, 24" Glide Rail	6	**6551727**	141 163N	3.2	$1,486.00
Deluxe, Hand Spray 5 Setting, CP Plastic, 1.80 gpm WaterSense®, Metal Hose, 24" Glide Rail	6WS	**6551728**	141 163WS	3.2	$1,486.00
Deluxe, Hand Spray 5 Setting, CP Plastic, 2.50 gpm, Metal Hose, 30" Glide Rail	3	**6551729**	141 919N	3.3	$1,778.00
Deluxe, Hand Spray 5 Setting, CP Plastic, 1.80 gpm WaterSense®, Metal Hose, 30" Glide Rail	3WS	**6551730**	141 919WS	3.3	$1,778.00
Low Flow (1.5 gpm), Hand Spray Pause, 4 Setting, CP Plastic, Metal Hose, 24" Glide Rail, WaterSense®	M	**6551732**	141 152FL	3.2	$1,442.00
Low Flow (1.5 gpm), Hand Spray Pause, 4 Setting, CP Plastic, Metal Hose, 30" Glide Rail, WaterSense®	L	**6551731**	141 150FL	3.3	$1,634.00
Standard Hand Sprayer, Push Button, CP Plastic, 2.50 gpm	—	**6551736***	141161AN	0.21	$250.10
Standard Hand Sprayer, Push Button, CP Plastic, 1.80 gpm, WaterSense®	—	**6551741***	141161AWS	0.21	$250.10
Professional Hand Sprayer, Push Button, White Plastic, 2.50 gpm	—	**6551746***	141318AN	0.21	$274.20
Professional Hand Sprayer, Push Button, White Plastic, 1.80 gpm, WaterSense®	—	**6551747***	141318AWS	0.21	$274.20
Deluxe Hand Sprayer, 5 Setting, CP Plastic, 2.50 gpm	—	**6551743***	141163AN	0.44	$808.10
Deluxe Hand Sprayer, 5 Setting, CP Plastic, 1.80 gpm, WaterSense®	—	**6551744***	141163AWS	0.44	$808.10
Low Flow Hand Sprayer w/Pause, 4 Setting, CP Plastic, 1.50 gpm, WaterSense®	—	**6551745***	141150AN	0.45	$300.20
18" Glide Rail with Adjustable Cradle	—	**6551748***	141163EN	0.63	$744.80
24" Glide Rail with Adjustable Cradle	—	**6551740***	141163DN	0.67	$800.40
30" Glide Rail with Adjustable Cradle	—	**6551742***	141731N	0.79	$991.70
60" Stainless Steel Hose	—	**6551737***	141161BN	0.56	$417.00
Swivel Connector	—	**141161C***	141161C	0.30	$225.20
Wall Mount, 3-Position w/Screws & Plugs, 2/Kit	—	**6551738***	141161DN	0.04	$157.00
Supply Elbow, CP Plastic Cover, Brass 1/2" NPT	—	**6551739***	141320N	0.42	$217.00
Quick-Release Hose Coupling (Quick Disconnect)	—	**141804A**	141804A	0.40	$358.00

*Parts Discount Applies

Tub Spouts

Diverter, Chrome-Plated Brass, 3/4" IPS	Q	**141 159**	1.2	$347.80
Non-Diverter, Chrome-Plated, 1/2" IPS	R	**141 171**	0.4	$155.50
Diverter, Chrome-Plated, 1/2" IPS	S	**141 349**	0.7	$186.20
Diverter, Chrome-Plated Brass, 1/2" IPS	T	**141 350**	1.3	$320.30
Diverter, Chrome-Plated, 1/2" Slip-fit	U	**141 409**	1.0	$203.50

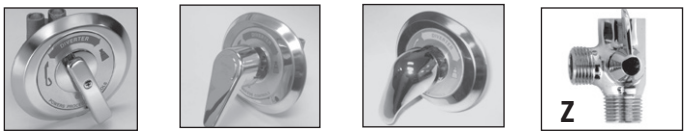

141600B **141600E** **141600F**

Diverters

Concealed Diverter Valve, 3-Port, 1/2" Sweat, Metal Handle	Y	**141600B**	2.0	$763.40
Concealed Diverter Valve, 3-Port, 1/2" Sweat, Deluxe ABS Handle	A	**141600E**	3.0	$814.90
Concealed Diverter Valve, 3-Port, 1/2" Sweat, Deluxe Metal Handle	B	**141600F**	3.0	$838.80
Exposed Diverter, 3-Port, Shower Arm-Type	Z	**141 700**	0.5	$245.00

043834A

Vacuum Breakers

Wall-Mounted Vacuum Breaker, Chrome-Plated Finish, Elevated	V	**131 258**	2.0	$1,073.00
In-Line Vacuum Breaker	W	**141 319**	0.4	$165.70
Vacuum Breaker, 1/2" NPT Outlet, Wall Mount, Polished Chrome	—	**131 970**	1.8	NLA
Vacuum Breaker, 1/2" NPT Bottom Inlet, 1/2" NPT Side Outlet, Polished Chrome	—	**043834A**	—	NLA

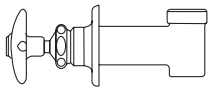

975 170

Volume Control Valves

Concealed, 1/2" IPS		**975 170**	1.0	$1,241.00
Showerhead Volume Regulator*		**141 305**	0.5	NLA

8943709 **8943928** **8943897**

Dial Thermometers

For mounting with HydroGuard systems:

Flush-mounted Thermometer with 3-Color Dial, Piping Manifold, and Stainless Escutcheon. 0 to 200°F		**131 251**	2.0	$1,678.00

Thermometers with Bulb for Liquid Exposure:

3-Color Dial, 1-1/16" Bulb. Scale is 0 to 200°F (–20 to 90°C)		**8943709**	0.5	$911.30
3-Color Dial, Horizontal Bulb. Scale is 0 to 200°F (–20 to 90°C)		**8943928**	1.0	$948.60
Black Dial, 1-7/8" Bulb. °F Scale. 30 to 130°F		**8943897**	1.0	$911.30
Combination Thermometer, 1/2" T/P Thermometer. 0 to 200 psi, 60 to 320°F		**131 123**	0.5	$664.10

Metering Valve

Metering Valve - Shower		**141 820**	3.6	$3,235.00

*Parts Discount Applies

To determine the price of a complete #11 Regulator, add the price of the desired lower housing (below) to the price of the desired thermal
system (page 38)

595 ☐ ☐ ☐ ☐ ☐ ☐ ☐ ☐ ☐ ☐ ☐ ☐ ☐ ☐

Lower Housing
Determine the order code from the lower housing assembly code chart (below). Eliminate the 590 prefix when ordering a complete regulator

Thermal system
Determine the order code from the thermal system code chart (page 38). Eliminate the 700 prefix when ordering a complete regulator

#11 Lower Housing Assemblies

590 ☐ ☐ ☐ ☐ ☐ ☐

Valve Type				Order
Seat	**Packing**	**Body**	**Trim**	**Code**
Single Comp	EP (Heating)	Bronze	Bronze	**CD**
Single	TFE (H) EP (C)	Bronze	Stainless	**ST**
Double	EP (H&C)	Bronze	Bronze	**DB**
Double	TFE (H) EP (C)	Bronze	Stainless	**DS**
Mixing	EP (Mixing)	Bronze	Bronze	**WM**

	Style					Order
Size	**CD**	**ST**	**DB**	**DS**	**WM**	**Code**
1/2" A	-	-	-	-	-	A50
1/2" B	-	-	-	-	-	B50
1/2" C	-	-	-	-	-	C50
1/2" D	-	-	-	-	-	D50
1/2"	$3,834.00	$4,169.00	-	-	-	050
3/4"	$3,949.00	$4,355.00	-	-	$4,640.00	075
1"	$4,970.00	$5,440.00	$6,012.00	$7,936.00	$5,023.00	100
1-1/4"	$5,786.00	-	$6,792.00	$8,652.00	$5,852.00	125
1-1/2"	$6,695.00	-	$7,819.00	$10,256.00	$6,759.00	150
2"	-	-	$10,595.00	$13,878.00	$8,999.00	200

Pricing: To determine the list price and availability of the selected lower housing, locate the size and style desired in the chart above. The number corresponding to your selection is your list price. If a list price is not shown for your selection, then your selection is not available in the size and style chosen.

Valve Action	**Order Code**
Heating (not available in WM body style)	H
Cooling (not available in type CD and WM body style)	C
Mixing (WM only)	M

Note: These products are made to order and are not returnable or subject to credit.

700 ☐ ☐ ☐ ☐ ☐ ☐ ☐

Bulb and Capillary Material	Price	Order Code
Copper (with 8" capillary)	$5,234.00	C
Stainless Steel (with 8" capillary)	$10,091.00	*S
Capillary Length		
8'	N/C	08
15' (copper)	$1,144.00	15
15' (stainless steel)	$1,795.00	15
30' (copper)	$1,634.00	30
30' (stainless steel)	$4,725.00	30
Bulb Style		
Fixed Union	N/C	D
No Pipe Fittings	N/C	*J
Adj. Union	$1,124.00	A
D Vertical	NLA	V
•All other bodies		
Non-Indicating	N/C	N
Indicating	$1,056.00	I

***Note: Stainless Steel J Bulb Style NLA**

Range/Bulb Size Code (two-digit codes below)
All ranges/bulb sizes listed below are **no charge.** Select range with setpoint in **upper third** for best performance. Consult factory for ranges/bulb sizes not listed.

Temperature Ranges
Single or Double Seat Valves
Sizes 1/2" through 2"

Range/Bulb Size Codes		Heating D.A.	Cooling R.A.	Water Mix 1/2" to 2"
	01	10º to 70ºF	0º to 60ºF	10º to 60ºF
1″x 20″	02	55º to 115ºF	45º to 105ºF	55º to 115ºF
Bulb	03	85º to 145ºF	70º to 130ºF	80º to 140ºF
	04		90º to 150ºF	100º to 160ºF
	05	110º to 170ºF	110º to 150ºF	110º to 160ºF
	06	NLA		
1″x 9″	07	NLA	NLA	NLA
Bulb	08	NLA	NLA	NLA
	09	NLA	NLA	NLA
	10	NLA	NLA	NLA
	11	NLA	NLA	NLA

Temperature Ranges
Double Seat
Valve Sizes 2 -1/2" through 4"

Range/Bulb Size Codes		Heating D.A.	Cooling R.A.	Water Mix
	12	10º to 70ºF	0º to 60ºF	Not applicable
1-1/4″	13	55º to 115ºF	45º to 105ºF	
x 24″	14	85º to 145ºF	70º to 130ºF	
Bulb	44		90º to 150ºF	
	15	110º to 170ºF		
	16	NLA		
1″x 20″	17	NLA	NLA	
Bulb	18	NLA	NLA	
	19	NLA	NLA	
	20	NLA	NLA	
	21	NLA	NLA	

#11 Accessories

Wells

	Chrome-Plated Copper		Stainless Steel	
Bulb Size	Part No.	Price	Part No.	Price
1″ x 9″	709 193	$662.40	808 478	$2,202.00
1″ x 20″	709 075	$934.00	808 475	$2,477.00

Stem Lubricator

(not recommended for steam packing)

Part No.	Price
590184A	$314.00

Note: Thermal systems are made to order (MTO) and are not returnable or subject to credit.

593 □ □ □ □ □ □ □ □ □ □ □ □ □

Valves
High Performance 2-way . . . . . **SS**
Economy 2-way . . . . . **SD**
Mixing . . . . . **WM**
High Capacity
Balanced 2-way . . . . . **DB**
Precision Low Flow. . . . . **VE**

Size . . . . . Order Code
1/2" (VE only) **A50-D50**
1/2" (others)* **050**
3/4" **075**
1" **100**
1 1/4". **125**
1 1/2". **150**
2" **200**

End Connections
Screwed. . . . . **S**

Valve Trim
Stainless (DB, SS, VE) . . . . . **S**
Bronze w/Ep (DB, SD, WM) . . . . . **B**
Bronze w/ Teflon (WM) . . . . . **T**

Action
Fail Open (Air-to-Close). . . . . **X**
Fail Closed (Air-to-Open). . . . . **C**
Mix. . . . . **M**

Packing
Teflon V-Ring . . . . . **S**
EP V-Ring . . . . . **W**

ACCESSORIES SELECT CODE
(refer to next page)

ACTUATOR SELECT CODE
(refer to next page)

*Not available with WM & SD type body.

Note: These products are made to order (MTO) and are not returnable or subject to credit.

Valve Body Prices

SS

Size Code	Body Style/Valve Trim	Price
050	Screwed-NPT, 17-4 SS	$4,586.00
075	Screwed-NPT, 17-4 SS	$4,986.00
100	Screwed-NPT, 17-4 SS	$5,358.00

Size Code	Body Style/Valve Trim	Price
125	Screwed-NPT, 17-4 SS	$7,192.00
150	Screwed-NPT, 17-4 SS	$7,954.00
200	Screwed-NPT, 17-4 SS	$12,048.00

SD

Size Code	Body Style/Valve Trim	Price
075	Screwed-NPT, Bronze	$3,164.00
100	Screwed-NPT, Bronze	$3,723.00
125	Screwed-NPT, Bronze	$4,524.00

Size Code	Body Style/Valve Trim	Price
150	Screwed-NPT, Bronze	$5,092.00
200	Screwed-NPT, Bronze	$6,688.00

WM

Size Code	Body Style/Valve Trim	Price
075	Screwed-NPT, Comp. Disc	$4,476.00
075	Screwed-NPT, Teflon	$5,018.00
100	Screwed-NPT, Comp. Disc	$5,018.00
100	Screwed-NPT, Teflon	$6,609.00
125	Screwed-NPT, Comp. Disc	$6,609.00

Size Code	Body Style/Valve Trim	Price
125	Screwed-NPT, Teflon	$4,700.00
150	Screwed-NPT, Comp. Disc	$5,270.00
150	Screwed-NPT, Teflon	$5,270.00
200	Screwed-NPT, Comp. Disc	$6,939.00
200	Screwed-NPT, Teflon	$6,939.00

DB

Size Code	Body Style/Valve Trim	Price
100	Screwed-NPT, Bronze	$8,064.00
100	Screwed-NPT, 316 SS	$11,315.00
125	Screwed-NPT, Bronze	$12,031.00
125	Screwed-NPT, 316 SS	$17,216.00

Size Code	Body Style/Valve Trim	Price
150	Screwed-NPT, Bronze	$8,467.00
150	Screwed-NPT, 316 SS	$11,882.00
200	Screwed-NPT, Bronze	$12,633.00
200	Screwed-NPT, 316 SS	$18,077.00

VE

Size Code	Body Style/Valve Trim	Price
A-D50	Screwed-NPT, 300/400 SS	$4,546.00

Actuator Select Code

CODE	PNEUMATIC DIAPHRAGM ACTUATORS	PRICE
46	46 Sq. In. 1"Max Valve Stroke w/Standard Springs adjustable start w/6-12 lb. Fixed Span	$3,314.00
4X	46 Sq. In. 1"Max Valve Stroke w/Extended Springs (Requires Positioner), adjustable start w/22 lb. Span	$4,551.00
4C	46 Sq. In. 1"Max Valve Stroke Extreme Cycle Springs adjustable start w/6-12 lb. Fixed Span	$4,551.00

Accessories Select Code

CODE	DESCRIPTION	PRICE
	Bellofram 1000 I/P'S	
IS	3–15 psi	$7,862.00
TS	1–17 psi	$7,862.00
US	3–27 psi	$7,862.00
	CONTROL/AIR TYPE 900X I/P	
ES	0–30 psi	$10,134.00
	UTILITY POSITIONER AND I/P	
BS	4–20 mA	$13,130.00
	UTILITY POSITIONER	
PS	3-15 psi	$6,725.00
RS	3-9 psi	$6,725.00
SS	9-15 ps	$6,725.00
	NO ACCESSORIES	
OS	No Accessories	N/C

Note: These products are made to order (MTO) and are not returnable or subject to credit.

596 □□ □□□□ □□□□□□□

Valves
Mixing . . . . . **MI**

Size
2 1/2" **250**
3" **300**
4" **400**
5" **500**
6" **600**

End Connections
125# Flanges . . . . . **F**

Valve Trim
Bronze . . . . . **B**

Action
Mixing . . . . . **M**

Packing
Teflon . . . . . **T**

ACCESSORIES SELECT CODE

ACTUATOR SELECT CODE

Actuator Compatibility

2-1/2", 3", 4"	46" and 100" Diaphragm
5", 6"	100" Diaphragm

Valve Body Prices

MI

Size Code	Body Style/Valve Trim	Price
250	125 lb. Flanges, Bronze	**$11,582.00**
300	125 lb. Flanges, Bronze	**$13,773.00**
400	125 lb. Flanges, Bronze	**$19,736.00**
500	125 lb. Flanges, Bronze	**$28,402.00**
600	125 lb. Flanges, Bronze	**$32,880.00**

Actuator Select Code

CODE	PNEUMATIC DIAPHRAGM ACTUATORS	PRICE
46*	46 Sq. In. 1"Max. Valve Stroke Stainless Steel Springs adjustable start w/6-12 lb. Fixed Span	**$3,314.00**
4X*	46 Sq. In. 1"Max. Valve Stroke w/Extended Stainless Steel Springs (Requires Positioner), adjustable start w/22 lb. Span	**$4,551.00**
1M	100 Sq. In; 5-10 psi Spring Range, (Mixing Valves)	**$11,045.00**

***Not Available with 5" or 6" valve**

Accessories Select Code

CODE	DESCRIPTION	PRICE
	Bellofram 1000 I/P'S	
IS	3–15 psi	**$7,862.00**
TS	1–17 psi	**$7,862.00**
US	3–27 psi	**$7,862.00**
	CONTROL/AIR TYPE 900X I/P	
ES	0–30 psi	**$10,134.00**
	UTILITY POSITIONER AND I/P	
BS	4–20 mA	**$12,586.00**
	UTILITY POSITIONER	
PS	3-15 psi	**$6,725.00**
RS	3-9 psi	**$6,725.00**
SS	9-15 ps	**$6,725.00**
	NO ACCESSORIES	
OS	No Accessories	**N/C**

Note: These products are made to order (MTO) and are not returnable or subject to credit.

597 ☐ ☐ ☐ ☐ ☐ ☐ ☐ ☐ ☐ ☐ ☐ ☐ ☐

Valves
2-Way. . . . . **SI**

Size
2 1/2" **250**
3" **300**
4" **400**
5" **500**
6" **600**

End Connections
125# Flanges . . . . . **F**

Valve Trim
Bronze . . . . . **B**

Action
Fail Open (Air-to-Close). . . . . **X**
Fail Closed (Air-to-Open). . . . . **C**

Packing
Teflon . . . . . **T**

ACCESSORIES SELECT CODE

ACTUATOR SELECT CODE

Valve Body Prices

SI

Size Code	Body Style/Valve Trim	Price
250	125 lb. Flanges, Bronze	**$11,582.00**
300	125 lb. Flanges, Bronze	**$13,773.00**
400	125 lb. Flanges, Bronze	**$19,736.00**
500	125 lb. Flanges, Bronze	**$28,402.00**
600	125 lb. Flanges, Bronze	**$32,880.00**

Actuator Select Code

CODE	PNEUMATIC DIAPHRAGM ACTUATORS	PRICE
4C	46 Sq. In., 1" Max Valve Stroke Extreme Cycle Springs, adjustable start w/6-12 lb. fixed span.	**$3,314.00**
1U (for 6" valve only)	100 Sq. In; 8-13 psi Spring Range, (Normally Closed Valves)	**$11,045.00**
1L (for 6" valve only)	100 Sq. In; 3-8 psi Spring Range, (Normally Open Valves)	**$11,045.00**

Accessories Select Code

CODE	DESCRIPTION	PRICE
	Bellofram 1000 I/P'S	
IS	3–15 psi	**$7,862.00**
TS	1–17 psi	**$7,862.00**
US	3–27 psi	**$7,862.00**
	CONTROL/AIR TYPE 900X I/P	
ES	0–30 psi	**$10,134.00**
	UTILITY POSITIONER AND I/P	
BS	4–20 mA	**$13,130.00**
	UTILITY POSITIONER	
PS	3-15 psi	**$6,725.00**
RS	3-9 psi	**$6,725.00**
SS	9-15 ps	**$6,725.00**
	NO ACCESSORIES	
OS	No Accessories	**N/C**

Note: These products are made to order (MTO) and are not returnable or subject to credit.

Unmounted Valve Accessories

PRODUCT NUMBER	DESCRIPTION	PRICE
	UTILITY GRADE PNEUMATIC POSITIONERS	
1473000D	1/8" - 3/16" Stroke Full Range	**5,933.00**
1473000C	1/4" - 3/8" Stroke Full Range	**5,933.00**
1473000	1/2" - 3/4" Stroke Full Range	**5,933.00**
1473000A	1" - 1 1/2" Stroke Full Range	**5,933.00**
1473000C	1/8" - 3/16" Stroke Split Range	**5,933.00**
1473000	1/4" - 3/8" Stroke Split Range	**5,933.00**
1473000A	1/2" - 1" Stroke Split Range	**5,933.00**
1420373	Positioner Output Pressure Gauge	**204.90**
	POSITIONER MTG. KIT	
147301E	46" Act., Fail Open, 1/4" Stem	**374.70**
147302E	46" Act., Fail Close, 1/4" Stem	**374.70**
147301G	46" Act., 1/2" Stem	**374.70**
147301H	100" Act., 1/2" Stem	**374.70**

PRODUCT NUMBER	DESCRIPTION	PRICE
	UTILITY MTG. KIT I/P & POSITIONER	
593002E	46" Act., Fail Open, 1/4" Stem	**1,251.00**
593003E	46" Act., Fail Close, 1/4" Stem	**1,251.00**
593002G	46" Act., 1/2" Stem	**1,251.00**
593002H	100" Act., 1/2" Stem	**1,251.00**
	UTILITY I/P MTG. KIT	
512118E	46" Act., Fail Open, (Dir.Act.)	**815.70**
512119E	46" Act., Fail Close (Rev.Act.)	**815.70**
590184A	Stem Lubricator (Type “W” Packing Only)	**314.00**
512118H	100" Act.	**815.70**
	BELLOFRAM 1000 I/P’S	
512 015	3-15 I/P Transducer	**4,126.00**
512 117	1-17 I/P Transducer	**4,126.00**
512 027	3-27 I/P Transducer	**4,126.00**
	CONTROL/AIR TYPE 900X I/P	
100 127	0-30 psi with Mounting Kit, 46" Act.	**6,757.00**
100127H	0-30 psi with Mounting Kit, 100" Act.	**6,952.00**

Accritem® Temperature Controller

Adjustable setpoint, 50° to 350°F.
Complete with pressure gauges and fittings.

Rigid Copper Bulb (1/2″ NPT Pipe Fitting)

Model	Action	Order Code	Weight (in lbs.)	List Price
Air Operated	Direct	**7441213**	3	**3,752.00**
	Reverse	**7441214**	3	**3,752.00**
Water Operated	Direct	**7441217**	4	**5,666.00**
	Reverse	**7441218**	4	**5,666.00**

Rigid Stainless Bulb (1/2″ NPT Pipe Fitting)

Model	Action	Order Code	Weight (in lbs.)	List Price
Air Operated	Direct	**7441270**	4	**5,235.00**
	Reverse	**7441271**	4	**5,235.00**

Accritem® Accessories

Description	Order Code	Weight (in lbs.)	List Price
Accessory Kit for Air or Gas	**744 107**	2	**2,049.00**
Socket Well—Copper	**744 111**	1	**963.00**
Socket Well—Stainless Steel	**744 082**	1	**2,323.00**
Valve and Seat Repair Kit	**744 168**	1	**288.20**

Accritem® II Temperature Controller

Adjustable setpoint, dual scale: 0° to 300°F and 20° to 150°C.
Complete with pressure gauges and fittings.

Remote Copper Bulb (3/8″ x 4″ bulb, 4 ft. capillary)
Includes 3/8″ NPT Compression Fitting

Model	Action	Order Code	Weight (in lbs.)	List Price
Air Operated	Direct	**7441256**	2	**4,170.00**
	Reverse	**7441258**	2	**4,170.00**

Remote Stainless Bulb (3/8″ x 4″ Bulb, 10 ft. capillary)
Includes 3/8″ NPT Compression Fitting

Model	Action	Order Code	Weight (in lbs.)	List Price
Air Operated	Direct	**7441272**	2	**5,823.00**
	Reverse	**7441273**	2	**5,823.00**

Accritem® II Accessories

Description	Order Code	Weight (in lbs.)	List Price
Accessory Kit for Air or Gas	**744 107**	2.0	**2,049.00**

Part No.	Description	List Price
006 379	COPPER TUBING	126.40
030 041	FIL HD BR SCREW	14.50
030 066	SCREW, FIL HD BR	15.10
030 068	FIL HD BR SCREW	14.50
030 070	FIL HD BR SCREW	15.10
030 104	SCREW FIL HD BR	15.10
030 106	SCREW	14.50
030 109	FIL HD BR SCREW	14.50
030 126	FIL HD BR SCREW	14.50
030 211	10-32 X 3/8" SCREW	14.50
030 884	SCREW, ADJ. STOP 10-32 X 5/16"	14.50
030 885	SCREW FOR BONNET 10-32 X 1"	14.50
030 887	SCREW 10-24 X 9/16" LENGTH	15.10
030 889	SCREW	14.50
030 890	SCREW 10-24 X 3/4" LENGTH	15.10
030 895	SCREW	15.10
030542J	SCREW	15.10
030546J	SCREW	15.10
030884BP	SCREW, STAINLESS-BULK 50/KIT	130.80
030887BP	SCREW. QTY= 25	54.10
030889BP	SCREW- BULK 50/KIT	199.90
032 071	FL HD BR SCREW	14.50
032 072	FL HD BR SCREW	15.10
032465A	SCREW, 3/8-24 X 1/2" LG.	32.60
034 234	SCREW	15.10
034 377	SCREW, SET 10-32 X 3/8" STEEL	14.90
034 407	SCREW	15.10
034 413	SCREW 8-32 X 3/16"	15.10
034047G	SCREW, 6-32 X 5/16"-SERIES 460	15.10
034221G	OVAL PH HD SCREW	15.10
034223G	PHILLIPS HEAD SCREW	15.10
034224G	SCREW 8-32 X 1-1/4" LG	15.10
034510G	SCREW	15.10
034512K	SCREW, 8-32 X 1-1/4"	14.50
034515K	SCREW, 8-32 X 1/2" LG.	14.50
041 100	NUT, HEX BRS.	15.10
041 125	HEX BRS NUT	14.90
041 127	NUT, LOCK 1/4-28 BR.CHR.PLATE	12.50
041 142	HEX BRS NUT	14.90
041 226	NUT 3/8-16 BRASS OR ST. STL.	14.90
041167J	SCREW	15.10
041225K	NUT, SHAKEPROOF 5/16-18	14.90
042 672	BRASS NIPPLE 1/2"	42.20
042672A	NIPPLE	65.00
042672G	NIPPLE, 1-1/8" X 1/2"	54.70
043 342	PIPE PLUG, 2" BRASS	410.20
043 351	1/8" FEMALE BRASS PIPE TEE	59.40
043009C	THREAD PROTECTOR	15.10
043221G	REDUCING BUSHING	77.50

Part No.	Description	List Price
043401A	PIPE-TEE 1/2" POLISHED CHROME	150.20
043419A	3/4" THERM TEE ACCORN	262.20
043576G	ELBOW (420-100)	126.40
043810A	ESCUTCHEON PLATE	15.10
043819A	PIPE STRAP, POLISHED CHROME	245.00
044 045	ELBOW, STREET 90 DEGREE	16.60
046007K	LOCKWASHER, SHAKEPROOF	15.10
046008K	WASHER, SHAKEPROOF STEEL	15.10
046011J	WASHER, SHAKEPROOF	14.90
046164K	WASHER	15.10
047 002	O-RING	15.10
047 008	O-RING 5/16 X 7/16 X 1/16	15.10
047 010	O-RING	15.10
047 013	QUAD-RING 3/8 X 1/2 X 1/16	15.10
047 015	O-RING 11/16 X 7/8 X 3/32	15.10
047 020	RING	15.10
047 022	RING	15.10
047 025	O-RING 1-3/8 X 1-5/8 X 1/8	15.10
047 029	RING	15.10
047 031	RING	15.10
047 033	O-RING 1/2 X 5/8 X 1/16	15.10
047 034	O-RING 5/16 X 7/16 X 1/16	15.10
047 035	O-RING 2 X 2-1/4 X 1/8	15.10
047 036	RING	15.10
047 040	O-RING 3-3/8 X 3-5/8 X 1/8	15.10
047 043	QUAD RING 1/8 X 1/4 X 1/16	15.10
047 045	O-RING 1/4 X 3/8 X 1/16	15.10
047 047	RING	15.10
047 049	RING	14.20
047 108	O-RING	14.20
047 120	O-RING 7/8 X 1 X 1/16	15.10
047 125	QUAD RING	15.10
047 126	QUAD RING 3/8 X 1/2 X 1/16	15.10
047 128	O-RING 2-1/8 X 2-1/4 X 1/16	15.10
047 129	O-RING	15.10
047 130	O-RING 2-1/2 X 2-5/8 X 1/16	15.10
047 131	O-RING 1-3/16 X 1-5/16 X 1/16	15.10
047 132	O-RING 1-7/8 X 2 X 1/16	15.10
047015BP	O-RING, QTY= 25	56.20
047035BP	O-RING, QTY= 25	126.70
047128BP	O-RING- BULK ,QTY= 5, KIT	173.50
080 008	SCREW 8-32 X 2-1/4 BRASS	15.10
080 009	SCREW	15.10
080 011	SCREW 8-32 X 2"	15.10
080 013	SCREW 8-32 X 1 BRASS FLAT HEAD	15.10
080 026	SCREW 8-32 X 3-1/2 POL.CHR.PL.	15.10
080 029	SCREW,10-32 FLAT HEAD	15.10
080 032	SCREW 1/4"-20 X 5/8" LG	15.10
080 034	SCREW 1/4 X 20 X1 STAINLESS	14.90

Part No.	Description	List Price
080 037	SCREW, TRIM PLATE	15.10
080 041	SCREW 8/32, 1-1/4" LONG	15.10
080 042	SCREW 8/32 X 3 1/2 V/PROOF	28.10
080 053	6-32 X 1/4 LG ST STL SCREW	15.10
080 072	SCREW 10-32 X 2" LG	15.10
080 076	SET SCREW	14.50
080022A	SCREW	15.10
080026BP	SCREW, QTY= 25	253.30
080042A	V/P SCREW, 8 32 X 3/4	15.10
081 008	NUT, 5/16 18 X 19/64 X 9/16	14.90
082 005	WASHER 1" OD	15.10
082005R	WASHER	15.10
084 007	O-RING 1 3/8 X 1 1/2 X 1/16	15.10
084 008	O-RING 2 X 2 3/16 X 3/32	15.10
084 009	O-RING 2 9/16 X 2 3/4 X 3/32	15.10
084 010	O-RING 3 1/4 X 3 1/2 X 1/8	15.10
084 014	O-RING 5/8 X 3/4 X 1/16	15.10
084 015	O-RING	15.10
084 016	O-RING, SILICONE	15.10
084 020	O-RING	15.10
084 029	O-RING	15.10
084 030	O-RING	15.10
084 031	O-RING	15.10
084 032	O-RING	18.40
084 033	O-RING	15.10
084 041	O-RING	15.10
084 042	O-RING	15.10
084 045	O-RING	14.20
084033BP	O-RING, QTY= 25	328.80
087 126	SILICONE GEL CHEMPLEX 825	15.10
088 092	INSERTS, ROUGH IN	47.30
088 093	ROUGH IN, BOTTOM PAD	39.40
088 200	SET SCREW, 10 32 X .25 SS	15.10
089 003	WRENCH 3/32" SERVICE CR STL	15.10
089 004	WRENCH	15.10
0S19383	1" STEM EXT & DISK HOLDER ASSY	779.80
100 124	C WASHER SPRING TEMPER	15.10
100 140	WASHER .031 TH'K BRASS	15.10
100034A	WASHER BRIGHT NICKEL PLATE	15.10
105 058	HANDLE KIT 4"	56.60
105 059	HANDLE KIT 6"	112.40
105 060	CARTRIDGE KIT	315.90
105 061	BASE PLATE	112.40
105 062	BASE PLATE	149.30
105 064	SUPPLY TUBES	149.30
115 072	VALVE BODY	524.90
131 257	ESCUTCHEON, POLISHED	783.30
131 275	ILL. LOCK W/KEYS F/CABINETS FRO	410.20
131274A	KEY REPLACEMENT	70.80

Part No.	Description	List Price
141 000	KIT, 1/2" CHECKSTOP	190.20
141000A	KIT, 1/2" CHECKSTOP, PC	206.90
141001BP	SOFT PART & PLUNGER	672.00
141 006	SLIDING PIECE FOR #1 and #2 HANDSHOWER	148.40
141 313	FLANGE FOR 141 198 POL. CHROME	51.50
141 320	ELBOW W/FLANGE	161.10
141 620	HANDLE KIT, INLINE DIVERTER	63.40
141 621	STEM KIT INLINE DIVERTER	114.70
141 622	TRIM KIT, INLINE DIVERTER	185.60
141 651	CHECKSTOP ASSEMBLY	23.30
141 809	SHOWER MTD W/SPRING (141 163)	119.60
141 831	TIMER, SSAC INC SINGLE SHOT	1,685.00
141 832	ILLINOIS LOCK W/2 KEY	451.90
141 833	PUSHBUTTON SWITCH W/SCREW CON	309.60
141 839	CARTRIDGE ASSY METERING VALVE	1,115.00
141 843	RING, THERMOMETER	33.40
141166A	HOSE ASSY 18' W/SHAMPOO HEAD	1,799.00
141326B	1/2" ANGLE CHECK (S.J.)	203.70
141381F	SCREW (PKG OF 12)	76.40
141600A	TRIM KIT INLINE DIVERTER	255.90
141612B	INSERT, GRAPHIC	82.10
141741A	COLLAR REPAIR KIT DIVERTER VLV	255.90
141831A	TIMER SOCKET	178.80
141901N	SHOWERHEAD KIT	540.50
1420229	GAUGE, RECEIVER 1 1/2	362.70
1420373	POS. OUTPUT PRESSURE GAUGE	204.90
1420431	PRESSURE GAUGE	144.00
145 449	PLUG BUTTON ACRYLIC KNOB	15.10
147 122	TAKE OFF PLATE ST. STL. 46"	36.00
200 046	PIPE PLUG, 1/2" BRASS	35.90
200046G	PLUG 1/2" BRASS CHROME PLATE	49.90
220 050	METAL HANDLE KIT	136.50
220 051	METAL TRIM PLATE	217.00
220 052	ABS HANDLE KIT	119.90
220 053	ABS TRIM KIT	190.30
220 054	SLEEVE KIT	97.10
220 060	CARTRIDGE KIT	265.80
220 451	METAL UPGRADE KIT	535.10
220 452	ABS UPGRADE KIT	480.70
220 453	FLAT METAL UPGRADE KIT	618.00
225 073	SPRING, VALVE	15.10
225 350	H. CY. WRENCH KIT	607.50
225 404	HUVA CUP MODEL 8	15.10
225 444	BODY 1/2" ROUGH BRZ	832.10
225 445	BODY, BRIGHT CHROME 1/2"	898.00
225257A	SCREW, RETAINING HANDLE	15.90
225261A	MIXER CVR	203.70
225294A	LOCK RING	97.80
225404BP	HUVA CUP, QTY= 25	286.70

Part No.	Description	List Price
227 164	PLUG BUTTON	16.60
227 166	RETAINER (DIAL INSERT)	54.10
227 196	SLEEVE	47.30
227 197	WASHER	15.10
227 354	CONTROL KNOB	53.10
227166BP	RETAINER RING, QTY= 15	691.00
227354A	CONTROL KNOB PLASTIC	80.20
230 042	CHECK STOP L.H.	529.80
230 045	CHECKSTOP	529.80
230 065	GASKET 1 9/16 X 1/32 THK	15.10
230 079	STEM	57.90
230 081	STEM	63.30
230 083	GASKET	15.10
230 084	SCREEN	15.10
230 103	POPPET SPRING	15.10
230 104	SCREEN	43.30
230 116	SCREEN	32.70
230 117	UNION NUT	92.60
230 123	POPPET SPRING	15.10
230 127	POPPET SPRING	15.10
230 129	1/2" TRIPLE DUTY P	119.90
230 132	TRIPLE DUTY POPPET K	179.80
230 134	3/4" TRI DUTY SCREEN	179.80
230 135	3/4" TRIP DUTY POP	179.80
230 136	1-1/4" TRI DUTY SCRN	269.70
230 137	1-1/4" TRI DUTY POPPET	269.70
230 147	VOLUME STEM	73.70
230 186	POPPET	49.90
230 193	RT HND CHECK BODY ROUGH BRONZE	191.20
230 223	VOLUME STEM EXTENSION	103.90
230 261	CHECK STOP ASSEMBLY	438.50
230 262	CHECK STOP ASSEMBLY	411.10
230 269	3/4" STEM PLAIN	116.50
230 271	3/4" POPPET ASSEMBLY	48.00
230 281	CHECK STOP ASSEMBLY	475.10
230 289	STEM ASSEMBLY	197.80
230 293	1-1/4" POPPET ASSEMBLY	93.70
230076A	BONNET	86.20
230078A	BONNET	111.10
230261M	3/4" ROUGH BRONZE CHECK STOP	826.80
230262G	CHECK STOP	934.00
230281M	1-1/4" ROUGH BRONZE CK STOPS	1,410.00
230282G	BRT CHROME CHECK STOP	1,571.00
390 001	MOTOR HOUSING	57.90
390 006	431 FUNNEL	53.60
390 010	ADAPTER, MOTOR	61.60
390 016	431 MOTOR REPLACEMENT KIT	1,042.00
390 017	432 MOTOR REPLACEMENT KIT	1,042.00
390 024	ADAPTER, MOTOR	114.40

Part No.	Description	List Price
390 026	ADJUSTMENT LOCKING SCREW	14.20
390 036	432 ACTUATOR REPLACEMENT KIT	909.70
390 037	431 ACTUATOR REPLACEMENT KIT	909.70
390 048	COMPRESSION SPRING,HELICAL	15.90
390 051	GASKET, MOTOR HOUSING	15.10
390 056	BUSHING 1" X 1/2" HEX	38.10
390 065	433 ACTUATOR REPLACEMENT KIT	1,136.00
390 066	434 ACTUATOR REPLACEMENT KIT	1,345.00
390 067	431 POPPET REPLACEMENT KIT	761.50
390 068	432 POPPET REPLACEMENT KIT	849.10
390 069	433 POPPET REPLACEMENT KIT	1,427.00
390 070	434 POPPET REPLACEMENT KIT	1,496.00
390 095	GASKET	21.70
390 144	MOTOR HOUSING CAP	279.70
390 155	RETURN SPRING	15.10
390 162	RETURN SPRING	18.70
390 198	GASKET, MOTOR HOUSING	15.10
390 201	MOTOR FAILURE SPRING	15.10
390 243	GASKET, MOTOR HOUSING	15.10
390 248	SPRING, MOTOR FAILURE N 125	15.10
390 254	ADJUSTMENT KNOB RETAINER	47.30
390 256	ADJUSTMENT KNOB RETAINER	65.40
390 294	431 HYDRO GASKET REP	179.80
390 298	432 HYDRO GASKET REP	179.80
390 302	433 HYDRO GASKET REP	269.70
390 306	434 HYDRO GASKET REP	286.70
390 342	ADJUSTMENT KNOB, ROUGH BEZ	150.20
390 468	434 POPPET KIT, PRIOR FEB ‘91	1,427.00
390 491	POPPET	230.50
390 500	432 HI/LO MOTOR REPL. KIT	838.80
390 504	MOTOR ADAPTER	114.70
390 505	MOTOR ADAPTER	57.90
390 507	WAX MOTOR	161.70
390 511	433 VALVE UPGRADE KIT	1,564.00
390 512	434 VALVE UPGRADE KIT	1,696.00
390 543	1434 MOTOR REPLACEMENT KIT	1,280.00
390 546	ADJUSTMENT SCREW	19.40
390 571	WRENCH	58.70
390 579	ACTUATOR REPLACEMENT KIT	191.90
390 580	CARTRIDGE REPLACEMENT KIT	440.70
390 581	GASKET’S O-RING KIT	41.70
390 619	ACTUATOR	204.90
390 620	SPRING	14.50
390 671	ACTUATOR	398.60
390 777	TEMPERATURE ADJUSTMENT SCREW	15.10
390 795	ADJUSTMENT LOCKING SCREW	15.10
390 800	CHECKSTOP REBUILD KIT	200.30
390 801	CHECKSTOP REBUILD KIT	232.30
390 802	PLUNGER KIT	53.80

Part No.	Description	List Price
390 803	PLUNGER KIT	59.70
390 804	SET SCREW	26.60
390 805	O-RING	15.20
390 806	O-RING	15.20
390 807	ACTUATOR	226.80
390 808	ACTUATOR	226.80
390 809	ACTUATOR	396.50
390 810	ACTUATOR	363.00
390 812	PLUNGER KIT	142.50
390 813	O-RING	15.20
390 814	ACTUATOR	1,056.00
390 815	ACTUATOR	1,137.00
390 816	PLUNGER KIT	147.40
390 826	FUNNEL KIT	369.60
390 827	FUNNEL KIT	415.80
390 828	FUNNEL KIT	479.70
390166A	SCREW, ADJ	26.90
390343A	ADJUSTMENT SCREW	15.10
400 023	SHUT OFF DISC	15.10
400 065	HARDWARE PACKAGE	14.50
400 066	HARDWARE PACKAGE	46.60
400 068	HARDWARE PACKAGE	34.80
400 078	HARDWARE PKG KIT	143.50
400023BP	SHUTOFF DISC BULK, QTY= 25	121.30
401 086	PLASTIC HANDLE	111.40
401 087	ESCUTCHEON, PLASTIC	96.40
401 093	INDICATOR LABEL	15.10
401 146	THROTTLING STEM MOLDED	15.10
401 161	RUBBER GASKET	15.10
401 162	BONNET MOLDED R/B 401162BP	74.30
401 165	MAX. TEMPERATURE STOP	15.10
401 175	BAL CHAMBER REPL KIT 400 & 410	315.90
401 176	STEM REPL KIT 400 HYDROGUARD MD4	91.20
401 177	SELECTOR DIAL	126.70
401 202	BAL. CHAMBER EXTRACTOR KIT	83.30
401 210	STRAINER CAP	15.10
401 218	MAX. TEMPERATURE STOP	15.10
401 229	ADHESIVE GASKET	15.10
401 230	DIAL ASSEMBLY	232.00
401 231	SELECTOR DIAL	87.90
401 253	SLEEVE	47.30
401 267	SLEEVE	26.50
401 278	STOP, ADJUSTABLE	15.10
401090A	PLUG BUTTON	15.10
401161BP	RUBBER GASKET BULK 25/KIT	124.20
401162BP	BONNET, QTY= 15	936.60
401230A	DIAL ASSEM KIT 400 HYD MD4	481.40
403 005	NUT ADJUSTMENT SCREW	15.10
403 007	PIPE PLUG BRASS	15.10

Part No.	Description	List Price
403005G	ADJUSTING SCREW NUT	14.50
410 138	SHUT OFF DISC SPG	15.10
410 145	WASHER, WAVY	15.10
410 146	GASKET	26.30
410 147	LIMIT STOP	15.10
410 157	VOLUME VALVE	15.10
410 182	SER 410 HYDRO GASKET REPL KIT	75.40
410 183	410 BAL CHAMBER REPL	304.30
410 191	HANDLE	228.00
410 195	PLUG BUTTON	18.70
410 203	COUPLING	19.40
410 233	STEM EXTENSION KIT	81.50
410 243	VALVE BODY MACHINED	376.00
410 248	BAL CHAMBR KIT 440 FOTOPL	340.20
410 284	GASKET	15.10
410 330	CHAMBER ASSEMBLY	92.60
410 339	RETAINER (FOR DIE, CAST DIAL)	32.60
410 346	BONNET	98.90
410 352	BONNET	311.00
410 365	LEVER HANDLE SCREW KIT (10)	49.90
410 366	O RING KIT, 047 020 QTY=.25	38.50
410 367	RETAINER KIT (10)	138.10
410 368	WASHER KIT (15 PER KIT)	65.80
410 369	WAVY WASHER KIT (10 PER KIT)	49.90
410 370	GASKET KIT (10)	63.70
410 371	SPLINED STOP 400 KIT (6)	75.40
410 372	VOLUME VLV KIT 410 (2)	62.00
410 374	DIAL INSERT STD	59.00
410 375	THROTTLING STEM ASSEMBLY	80.20
410 377	SUPPORT RING	41.20
410 378	STEM REPLACEMENT KIT	126.70
410 384	LEVER HANDLE KIT	179.80
410 389	DIAL ASSEMBLY KIT	405.50
410 393	PLASTIC BONNET (410 111)	66.30
410 396	BONNET KIT	197.80
410 413	DIAL 410	119.20
410 427	SPRING GUIDE FLOW RESTRICTOR	15.10
410 430	DIAL INSERT	35.90
410 440	BALANCE CHAMBER ASSEMBLY	203.70
410 442	410 GRAPHIC INSERT ASSEMBLY	61.90
410 445	STANDARD 410 DIAL ASSEMBLY GRAY	257.60
410 447	410 KNOB ASSEMBLY, ACRYLIC	127.00
410 448	410 LEVER ASSEMBLY	127.00
410 460	PLUG DIVERTER	111.90
410 565	TRI HANDLE KIT	245.50
410 570	SEAL KIT, OVER SIZE 410 INLET	62.00
410138BP	SHUTOFF DISC SPRING BULK, QTY=25	199.90
410375BP	STEM ASSY, QTY=15	1,138.00
410378A	STEM REPLACEMENT KIT	220.20

Part No.	Description	List Price
410427BP	FLOW RESTRICTOR 410, QTY= 25	197.80
420 034	VALVE ASSEMBLY	912.60
420 102	WASHER KIT	78.30
420 104	EYE BOLT	39.00
420 114	VALVE	411.90
420 124	TEMP STOP	14.20
420 128	VALVE ASSEMBLY	1,338.00
420 130	GASKET	15.10
420 143	VALVE ASSEMBLY	944.00
420 166	DIAL POLISHED FINISH	126.40
420 182	DIAL ASSEMBLY KIT	405.50
420 202	ROUGHING IN GUIDE	15.10
420 212	MAX. TEMP. STOP KIT (5)	83.30
420 213	LUCITE HANDLE INSERT KIT (2)	83.30
420 214	BONNET SCREW KIT (12)	71.80
420 215	HANDLE SCREW (4)	42.70
420 216	DIAL RETAINING SCREW KIT (20)	86.20
420 218	LEVER HANDLE SCREW KIT (10)	59.30
420 225	PLUG BUTTON KIT (4 PIECES)	99.40
420 230	HANDLE ASSEMBLY R/B 420 243	197.80
420 232	SLEEVE KIT	46.70
420 237	RAINBOW INSERT FOR 420	58.70
420 239	MOUNTING KIT	248.30
420 242	427 TRI HANDLE KIT	251.40
420 243	420 LEVER HANDLE KIT	203.70
420 300	KNOB ACRYLIC	58.70
420 308	GRAPHIC INSERT ASSEM, 420	64.00
420 314	PLUG BUTTON W/INSERTS	33.10
420 328	NAME PLATE TRIM	59.40
420 330	NAME PLATE & BASE PLATE ASSEMBLY	132.10
420 335	420 DIAL ASSEMBLY, GREY INSERT	257.60
420 336	420 LEVER ASSEMBLY	257.60
420 337	KNOB KIT 420, MODEL 8	257.60
420 356	420 LEVER ASSEMBLY	298.60
420 357	KIT, FULL UPGRADE MODELS 1-10 LCM	1,236.00
e420449	440 FOTOGUARD BODY ASSY	1,249.00
e420450	440 BODY ASY BR CHR MD7	1,845.00
420 451	KIT, FULL UPGRADE STD. MODELS 1-10	850.70
420 452	CARTRIDGE MODEL 1-10	146.60
420 453	WAX MOTOR KIT,STD. MODELS 1 10	190.90
420 454	BONNET KIT, MODELS 1 10	607.50
420 456	SEAL KIT, MODELS 1 10	35.20
420 481	PLASTIC KNOB KIT	179.80
420 495	410 LEVER HANDLE KIT	143.50
420 508	RING, PACK STOP BRASS MODEL 8	15.10
420 534	VALVE ASSEMBLY	710.20
420 578	PACKING GLAND	31.60
420 616	UPGRADE KIT, STD. TEMP.	551.30

Part No.	Description	List Price
420230A	419 LEVER HANDLE	167.50
420301E	HANDLE, LEVER CHROME PLATED	119.60
420308BP	GRAPHIC INSERT QTY= 15	773.40
420451C	KIT, HIGH CAPACITY CONVERSION, MOD. 1-10	850.70
420451H	KIT, FULL UPGRADE, HIGH TEMP. MOD. 1-10	850.70
420451L	KIT, FULL UPGRADE, LOW TEMP. MOD. 1-10	850.70
420452C	CARTRIDGE ASSEMBLY TYPE “H" CAP	146.60
420453H	WAX MOTOR HIGH TEMP. MOD. 1-10	190.90
420453L	WAX MOTOR LOW TEMP. MOD. 1-10	190.90
420508BP	PACKING RING, QTY= 25	286.70
427 017	CARTRIDGE ASSY.	220.10
H427017	CARTRIDGE ASSY.	290.60
427 019	BONNET ASSY.	318.90
427 200	UPGRADE KIT 427	890.80
427 201	UPGRADE KIT - LOW TEMP, 427	996.00
427 202	UPGRADE KIT - HIGH TEMP, 427	996.00
427 250	MOTOR KIT - STANDARD TEMP	378.40
427 251	MOTOR KIT - LOW TEMP	378.40
427 252	MOTOR KIT - HI TEMP	378.40
H427200	e427 UPGRADE KIT MODEL 1-3	890.80
H427202	e427 UPGRADE KIT HI TEMP.	997.90
430 016	TEMP ADJ LOCK SCREW KIT (10)	71.80
430 017	431 TEMP. ADJ. LOCKSCREW KIT	71.80
430 020	MAX. TEMP. ADJ. KIT	75.40
436 036	WASHER	15.10
440 034	VOLUME KNOB	103.90
440 035	VOLUME KNOB	74.40
440 041	DIAL	150.20
440 059	DIAL INSERT FOR FOTOGUARD	209.20
440 103	CONNECTOR	174.20
440 121	VOLUME STEM EXTENSION	250.40
440 125	SHUT OFF VALVE STEM EXT	61.50
440 145	ON OFF VALVE REPAIR KIT MDL5	119.20
440 151	SHUT OFF DISC	23.80
440 152	SHUT OFF DISC SPRING	15.10
440 154	SHUT OFF MANIFOLD	132.10
440 157	ADAPTOR	31.70
440 158	SPRING GUIDE	15.20
440 159	SHUT OFF STEM ASSEMBLY	209.50
440 160	SHUT OFF STEM ASSEMBLY	496.60
440 167	HANDLE SCREW	26.60
440 168	HANDLE SCREW	32.70
440 169	SHUT OFF HANDLE	61.50
440 170	VOLUME STEM EXTENSION	97.80
440 171	VOLUME STEM EXTENSION	232.50
440 172	VOLUME HANDLE	82.25
440 173	KNOB INSERT	203.70
440 175	440 CABINET	2,174.00

Part No.	Description	List Price
440 176	CABINET FOR FOTOPANEL	1,948.00
440 177	CONNECTOR	374.90
440 178	THERMOMETER MANIFOLD MOLD	185.60
440 205	ON OFF VALVE REPLACEMENT UNIT	660.00
440 207	DIAL POL FOR 440 208	251.40
440 212	NAME PLATE	29.80
440 223	QUAD RING KIT 440 FOTO (7)	75.40
440 231	BRACKET MOUNTING	232.50
440174A	FRONT PANEL	457.20
444 126	SCREWDRIVER ESP SHOWER	26.60
444 135	COVER KIT	29.80
444 142	JUNCTION BOX ASSEM	106.40
444 174	SOLENOID VALVE	921.50
444 183	SOLENOID REPAIR KIT	554.90
444 254	SOLENOID ADAPTER	94.10
444 260	SWITCH PIEZO	492.80
444 308	LOCK NUT, 1-3/8" 18	44.00
444 416	SWITCH PIEZO	504.90
445 102	BODY, STEAM & WATER MIXER	1,495.00
445 105	BONNET PLAIN	564.50
450 135	MOUNTING BRACKET	144.00
450 136	PIPE STRAPS	16.60
450 268	SOAP DISH HYDRO II	245.00
450 270	DIAL INSERT	74.40
450 271	SCREW. 8-32 X 1/2" POLISHED	15.10
450 272	SCREW DIAL INSERT V/P	39.00
450 274	SCREW	15.10
450 276	SCREW	18.70
450 277	GASKET, SHOWER HEAD BASE	15.10
450 295	BRACKET, MOUNTING	92.60
450 327	SHROUD EXTENSION 24" BRACKET	428.00
450 334	BRACKETS, MTG	149.90
450 356	COVER PLATE	392.60
450183B	BACK PLATE ASSEMBLY	501.00
450192RK	SLEEVE KIT	111.10
450267G	SHOWER HEAD BASE	477.90
450269G	CAP. END CHROME PLATE	138.10
450273A	SCREW	15.10
460 172	RED INDICATOR LIGHT	184.90
460 173	MINIATURE LAMP	38.50
460 231	CABINET DOOR ASSY	1,350.00
460 248	SWITCH, SELECTOR	614.70
460 323	TIMER W/KNOB & POTENTIOMETER	1,649.00
460053R	REBUILD KIT 1-1/2"	1,169.00
473 010	LEVER HANDLE	239.30
473 016	GASKET	18.40
473 021	CROSS	156.80
473 022	NUT COMP.	27.40

Part No.	Description	List Price
473 035	HANDLE KIT	275.00
473 037	KIT, STEM EXTENSION	209.50
473 045	INSTALLATION KIT	47.20
480 270	MOTOR REPLACEMENT KIT	88.20
590 088	VLV PKG KIT 200 PCS 591 490	2,625.00
590 131	BONNET	406.10
590 134	BONNET	381.90
590 140	BONNET	497.40
590 164	MOLYKOTE LUBRICANT	268.60
590 203	STEM EXTENSION	132.40
590 204	STEM EXT.	72.60
590 233	UNION TAIL PIECE	303.20
590 234	UNION NUT	139.60
590 328	STOP SLEEVE	88.20
590 329	STOP SLEEVE	410.20
590 462	STEM EXT SPACER	16.20
590 464	STEM EXT SPACER	36.00
590 487	1/2" VALVE BODY	303.20
590 488	VALVE BODY	457.20
590 567	1/2" POPPET	650.30
590 568	POPPET	728.80
590 569	POPPET	888.70
590 575	POPPET	457.20
590 584	VALVE BODY	457.20
590 585	VALVE BODY	457.20
590 604	STEM RETAINER	45.40
590 605	STEM RETAINER	144.00
590 606	STEM RETAINER	96.90
590 608	VALVE SEAT	106.50
590 610	VALVE SEAT	132.40
590 612	VALVE SEAT	167.10
590 623	DISC GUIDE	92.20
590 624	DISC GUIDE	36.00
590 650	POPPET	174.20
590 651	POPPET	144.00
590 664	POPPET	126.40
590 665	POPPET	185.60
590 666	R.A.POPPET	185.60
590 667	R.A.POPPET	185.60
590 668	VALVE BODY	483.90
590 684	VALVE SEAT	297.40
590 690	HLDR & STEM EXT ASY	663.90
590 691	HOLDR & STEM EXT ASY	663.90
590 692	COMP DISC/HOLDER/STEM EXT ASSY	762.60
590 693	STEM EXTENSION	114.40
590 743	STEM EXT & HLDR ASY	511.10
590 746	VALVE SEAT	135.60
590 748	VALVE SEAT	262.10

Part No.	Description	List Price
590 749	DISC HOLDER	144.00
590 756	DISC HOLDER	114.40
590 757	THRUST COLLAR	88.20
590 758	DISC GUIDE	71.10
590 759	DISC GUIDE	62.20
590 760	DISC GUIDE	52.70
590 762	SPACER	62.20
590 763	PACKING GLAND ASSY	72.50
590 775	DISC SLEEVE	88.20
590 779	STEM EXT & HLDR ASY	672.00
590 807	SPRING ADJM SCREW	88.20
590 813	SPG POSITION INDTR	15.10
590 815	PISTON PLATE WASHER	15.10
590 816	PISTON PL RTNING SCR	15.10
590 820	ADJUSTING ROD	12.50
590 821	SPRING	88.20
590 829	SPRING ADJM NUT ASY	114.30
590 859	LOWER HOUSING ASSY	458.50
590607A	RETAINING NUT STOP	79.60
590607B	RETAINING STOP NUT	79.60
590808B	STEM EXTENSION	26.90
591 692	3" DISC HOLDER ASSY	1,978.00
591 732	VALVE ASSEMBLY	3,128.00
591 733	VALVE ASSEMBLY	3,235.00
591 750	BODY, 3/4" VALVE,DIRECT ACTING	728.80
591 760	3/4" BONNET	447.10
591 762	1-1/4" BONNET	497.40
591 765	3/4" THROTTLING PLUG	132.40
591 766	1" THROTTLING PLUG	237.60
591 767	1-1/4" THROTTLING PLUG	237.60
591 768	1-1/2" THROTTLING PLUG	132.40
591 769	2" THROTTLING PLUG	268.60
591 770	3/4" VALVE DISC HOLDER	72.60
591 771	1" VALVE DISC HOLDER	191.20
591 772	1-1/4" VALVE DISC HOLDER	45.40
591 773	1-1/2" VALVE DISC HOLDER	144.00
591 774	2" VALVE DISC HOLDER	303.20
591 775	3/4" VALVE DISC	36.00
591 776	1" VALVE DISC	28.50
591 777	VALVE DISC	26.90
591 778	1-1/2" VALVE DISC	26.90
591 779	2" VALVE DISC	183.00
591 781	1" VALVE CAP	297.40
591 783	PACKING GLAND ASSEMBLY	117.10
591 786	STEM ASSEM 3/4" & 1" VALVES	426.20
591 789	1-1/4" VALVE STEM ASSEMBLY	426.20
591 790	1- 1/2" VALVE STEM	426.20
591 791	VALVE STEM ASSEMBLY	426.20
591 792	1-1/4" VALVE STEM	268.60

Part No.	Description	List Price
591 793	1-1/2" VALVE STEM	191.20
591 795	COLLAR	106.50
591 796	BEARING	26.90
591 797	BEARING	15.10
591 798	PACKING SPACER	76.10
591 802	STOP SLEEVE	220.20
591 803	STOP SLEEVE	114.40
591 903	VALVE DISC 2"	404.40
591 907	NUT DA	144.20
591 912	DA NUT	45.40
591 919	WASHER (1/2" TO 1")	15.10
591 920	PACKING SPRING (1/2" TO 1")	15.10
591 921	PACKING ASSEMBLY (1/2" TO 1")	106.50
591 922	SPACER (1/2" TO 1")	23.80
591 923	WASHER (1-1/4" TO 2")	15.10
591 924	PACKING SPRING (1-1/4" TO 2")	15.10
591 925	PACKING ASSEMBLY (1-1/4")	290.10
591 926	SPACER (1-1/4" TO 2")	15.10
591 927	STEAM SERVICE PKG KIT	259.00
591 928	STEAM SERVICE PACKING KIT	290.10
591 949	POPPET 1-1/4" S.S.	626.80
591 950	1-1/2" S S POPPET DIRECT & REV	800.30
591 951	2" S S POPPET DIRECT & REV	955.30
591 957	PACKING SET FOR FLOWRITES	60.20
591 958	CHEVRON PKG	88.20
591 974	VALVE REPAIR/REBUILD KIT	1,095.00
591 975	REBUILDING KIT	1,937.00
591 980	VLV REBUILD/REPAIR KIT WM	1,983.00
591922A	SPACER	20.25
593002E	MTG.KIT I/P & POS., 46" ACT.	1,251.00
594 080	PACKING SET TFE 1/4" DIA. STEM	132.40
594 081	PACKING SET TFE 3/8" DIA. STEM	132.40
594 090	PACKING SET EP 1/4" DIA. STEM	53.40
594 091	PACKING SET EP 3/8" DIA. STEM	53.40
594 104	BONNET 1/2"	362.70
594 106	CAP 1/2"	191.20
594 107	VALVE SEAT 1/2"	268.60
594 118	WASHER FOR 1/4" DIA. STEM	15.10
594 119	WASHER FOR 3/8" DIA. STEM	15.10
594 126	BONNET, MACHINED 3/4" & 1"	362.70
594 129	VALVE SEAT FOR REPAIR ONLY	321.10
594 137	BONNET	433.90
594 140	VALVE SEAT 1-1/4" N.C.	331.30
594 152	BONNET 2"	599.40
594 155	VALVE SEAT	368.50
594 157	PACKING NUT ASSEM. 1/4" STEM	72.50
594 158	PACKING NUT ASSEM. 3/8" STEM	86.20
594 170	PACKING RING	14.20
594 171	PACKING RING	15.10

Part No.	Description	List Price
594 194	CAP 3/4" & 1"	203.70
594 195	CAP 1-1/4" & 1-1/2"	268.60
594 196	CAP 2"	303.20
594 220	WATER SERVICE PACKING KIT 1/4"	144.20
594 221	WATER SERVICE PKG KIT 3/8"	209.10
594 251	LOCK NUT	136.40
594 289	WATER PACKING KIT FOR 1" VALVE	120.00
594 290	WATER PACKING KIT 3/8" 4 SETS	117.10
594 354	2" BRONZE POPPET ASSEMBLY	821.50
594 370	GASKET 5" KECKLEY VALVE	433.90
594 451	2" VALVE BODY RA	1,422.00
594 456	2" BONNET	458.50
594 457	BONNET	640.10
594 466	VALVE CAP 2"	297.40
594 467	1" BONNET	290.10
594 468	BONNET	562.00
594 470	VALVE CAP 1-1/2"	237.60
594 472	CAP 1-1/2"	144.20
594 475	VALVE SEAT 1-1/2"	262.10
594 477	1-1/2" VALVE BODY	955.30
594 478	VALVE BODY	950.20
594 479	1-1/2" BONNET	640.10
594 481	1-1/2" BONNET	391.50
594 488	1-1/4" RA 3 WAY VALVE	588.30
594 489	VALVE BODY	601.80
594 490	1-1/4" D.A. VALVE BODY	468.30
594 499	BONNET	280.70
594 500	1" VALVE BODY, R.A. 3 WAY	428.00
594 501	1" VALVE BODY	670.60
594 504	1" CD VALVE BODY	599.40
594 505	BODY	386.30
594 506	BODY	523.50
594 513	VALVE SEAT 1"	268.60
594 515	YOKE & BRIDGE ASSEMBLY BLUE	132.40
594 542	BODY & SEAT ASSEMBLY	1,323.00
594 549	1-1/4" N.O. STEM ASSEMBLY	670.60
594 550	STEM ASSY 1-1/2"	717.70
594 551	2" N.O. STEM ASSY	723.80
594 568	BODY & SEAT ASSEMBLY	936.90
594 570	1/2" N.O VALVE STEM ASSEMBLY	504.90
594 571	VALVE STEM ASSEMBLY N.O.	670.60
594 572	N.O. VALVE STEM ASSEMBLY (1")	599.40
594 819	STEM ASSEMBLY	132.40
594813A	STEM ASSEMBLY	191.20
594814D	STEM ASSEMBLY	197.10
594814H	STEM ASSEMBLY	197.10
594815A	STEM ASSEMBLY	191.20
594816E	STEM ASSEMBLY	191.20
594816F	STEM	191.20

Part No.	Description	List Price
594817A	STEM ASSEMBLY	191.20
594818A	STEM ASSEMBLY	191.20
595 496	PARTS KIT #11 REG	59.30
595 499	NAME PLATE	15.10
595 501	INNER SPRING #11 LOWER HOUSING	36.00
595 502	OUTER SPRING #11 LOWER HOUSING	53.40
595 503	SPRING GUIDE WASHER #11 REG.	15.10
596 150	DIAPHRAGM	483.90
596 151	ROLLING DIAPHRAGM	1,103.00
601 004	UNION NUT 1/2"	80.10
601 005	UNION TAIL PIECE 1 5/16" DIA.	45.40
601 010	SPACER BUSHINGS	31.50
601 016	1/2" BODY ASSEM	641.40
601 019	STEM HEAD RETAINER 1/2" R.A.	174.20
601 090	VALVE STOP REVERSE ACTING	114.40
601 091	VALVE STOP REVERSE ACTING	80.10
601 092	VALVE STOP REVERSE ACTING	88.20
601 093	VALVE STOP REVERSE ACTING	185.60
602 004	UNION NUT FOR 3/4" VALVE R.A	72.60
602 005	UNION TAIL PIECE 3/4" VALVE	62.20
603 003	1" POPPET	629.00
603 012	STEM HEAD RETAINER BALANCED VALVES	15.10
604 003	POPPET	670.60
605 003	POPPET	670.60
609 003	UNION TAIL PIECE 1" BALANCED VALVES	132.40
609 004	UNION NUT 1" BALANCED VALVES	106.50
609 009	SPACER BUSHING	36.00
609 019	SPACER BUSHING	36.00
609 021	SPACER BUSHING	114.40
609019A	SPACER BUSHING	23.80
609019B	SPACER BUSHING	50.50
609019C	STOP SLEEVE	15.10
610 003	UNION TAIL PIECE 1-1/4" VALVE	209.10
610 004	UNION NUT 1-1/4" BAL. VALVE	185.60
611 003	UNION TAIL PIECE 1-1/2" VALVE	237.60
611 004	UNION NUT	191.20
612 049	UPPER POPPET SEAT 2" BAL.VALVE	483.90
612 051	LOWER POPPET SEAT 2" BAL.VALVE	483.90
612 100	STEM HEAD RETAINER	88.20
628 008	LOCKNUT 1-3/8" HEX.VALVE BONNET	38.50
653 002	DISC HOLDER	132.40
653 003	DISC HOLDER	412.70
653 004	DISC HOLDER	412.70
653 005	DISC HOLDER	380.20
653 062	DISK	191.20
653 063	VALVE DISC 3/4" TEFLON	480.60
653 064	DISC	406.20
653 163	DISC	176.60
653 164	DISC	126.40

Part No.	Description	List Price
653 213	TEFLON VALVE DISC	440.00
653 214	1-1/4" TEFLON DISC	263.00
653 215	TEFLON DISC	256.10
653 216	TEFLON DISC	283.20
653 220	3/4" TEFLON DISC	161.10
653 225	VALVE DISC, 3/4"	21.70
653 226	VALVE DISC, 1"	26.30
653 227	VALVE DISC, 1-1/4"	29.80
653 228	VALVE DISC, 1-1/2"	39.70
653 229	VALVE DISC, 2"	44.00
654 009	DISC RETAINER NUT	66.30
654 010	DISC RETAINER NUT	159.30
654 011	DISC RETAINER NUT	53.60
654 012	DISC RETAINER NUT	132.40
654 016	STEM RETAINER	28.10
654 017	STEM RETAINER	20.90
654 019	STEM RETAINER	24.80
656 311	STEM HOLDER & DISC ASSEMBLY	754.30
656 527	CAP	159.50
656 528	3/4" VALVE CAP	132.40
672 615	FLOWRITE ACTUATOR LARGE SPRING	53.40
672 626	DIAPHRAGM, ACTUATOR	291.90
672 627	ACTUATOR THRUST PLATE	132.40
672 636	FR ACTUATOR STEM, DA, 1/4" TH'D	245.00
672 641	BEARING, STEM	15.10
672 642	SPRING	36.00
672 645	SPRING	108.60
672 646	SPRING	108.60
672 720	SCALE	61.60
672 721	SCALE 3/4 STROKE	70.80
672 722	SCALE	70.80
672 724	YOKE (PAINTED & MACHINED)	317.70
672618E	STEM BUSHING	150.20
672632A	TOP HOUSING	220.20
672633A	BOTTOM HOUSING PAINTED	203.70
672636A	FR ACTUATOR STEM, RA, 1/4 TH'D	245.00
672638B	WASHER INDICATOR	15.10
672723A	SCALE	27.40
700 424	GAUGE DIAL	26.90
700 713	HOUSING, #11 REG	144.20
705 005	1" TANK FTG	82.50
705 006	1-1/4" TANK FTG	343.10
708 036	STEM HEAD RETAINER	88.20
709 075	WELL ASSEMBLY	934.00
709 166	BELLOWS STOP	15.10
744 061	STOP PIN	12.50
744 062	GUIDE BUSHING	15.10
744 072	RESTRICTION SCREW	15.10
744 075	VALVE SPRING	15.10

Part No.	Description	List Price
744 078	ADJUSTING KNOB	36.00
744 082	WELL ASSEMBLY	2,323.00
744 083	GASKET	15.10
744 102	ACC KIT FOR ACCRITEM	477.40
744 124	SPG RETAINING SCREW	15.10
744 131	VALVE SEAT	79.10
744 134	RESTRICTOR SCREW	150.20
744 151	LEVER	117.10
744 154	LEVER PIVOT	15.10
744 163	VALVE	77.50
744 168	KIT	288.20
744 172	SENSITIVE TUBE ASSEMBLY	470.80
744 175	ADJUSTMENT SCREW	36.00
744 185	PLATE COVER JORDAN	103.90
744 191	SENSITIVE TUBE FOR SS ACCRITEM	1,912.00
744 202	BODY	447.10
744 205	COVER MOLDING	88.20
744 212	FOLLOWERS, POWER ELEMENT	23.80
744 213	VALVE SEAT	84.00
744 214	VALVE	106.50
744 215	SCREW, SPRING RETAINING	88.20
744 216	STEM, ADJUSTING	45.40
744 218	RESTRICTION SCREW	21.70
744 223	NAME PLATE	144.00
744 234	ADJ KNOB W/SCREW	72.60
744 254	ST BULB & CAP 7441272	2,180.00
744 283	SENSING ELEMENT, COPPER	433.90
744263A	PICK NAME PLATE	91.20
744263B	NAME PLATE, CELSIUS	88.20
800 005	BONNET	28.10
800 012	STEM ASSEMBLY, THROTTLING	23.00
800 020	GASKET	15.10
800 024	LIMIT STOP ASSEMBLY	74.30
800 030	SOFT COMPONENTS KIT	83.30
800 036	LEVER HANDLE KIT (1 SET)	110.00
800 040	FACEPLATE KIT, ROUND	275.00
800 050	WASHER	15.10
800 056	TEFLON GASKET	15.10
800 060	PLUNGER	15.10
800 061	PLUNGER DISC	15.10
800 063	O-RING	15.10
800 064	O-RING	15.10
800 075	COLOR INSERT FOR 800 ENGLISH	59.40
800 098	BILTMORE MODEL 1 & 2 REPAIR KIT W/LEVER	498.40
800 099	BILTMORE MODEL 1 & 2 REPAIR KIT W/KNOB	502.10
800 110	STEM EXT.	61.50
800 162	SCREW WITH PATCH	15.10
800 163	VALVE REPAIR KIT, SERIES 800	304.30
800 164	SCREW 8-32 X 5/8" LG	15.10

Part No.	Description	List Price
800 167	SCREW W/PATCH	15.10
800 168	SCREW 8-32 W/PATCH	15.10
800 183	ROUND DIAL FOR 800 BILTMORE	268.60
800 200	KIT, 800 ACRYLIC HANDLE	197.80
800032A	BILTMORE 800 STEM/BON REPL KIT	203.70
800164BP	SCREW W/PATCH BULK PACKED, QTY= 25	113.90
800310C	INTERNAL BALANCE CHAMBER KIT	245.50
900 012	THROTTLING STEM ASSEMBLY	36.50
900 014	WASHER, MIXING PLATE	15.10
900 015	BONNET	15.20
900 026	SPRING STOP CHECK	15.10
900 028	SOFT COMPONENTS KIT, 900 MDL 3	86.20
900 030	REPAIR KIT SOFT COMPONENTS	86.20
900 031	900 BAL CHAMBER KIT MODEL 2	251.90
900 032	INTERNALS KIT	245.50
900 033	SPRING, STEM	15.10
900 035	KNOB	111.10
900 036	LEVER HANDLE, BILTMORE	132.10
900 040	ROUND FACEPLATE KIT	232.90
900 047	NUT “U" TYPE	15.10
900 049	CHECK STOP REPAIR KIT 900	167.50
900 050	CHECKSTOP KIT, 900 MODEL 3	167.50
900 070	LEVER HANDLE	111.90
900 075	CARTRIDGE PULLER	15.10
900 085	SHUT OFF DISC	15.10
900 090	TRIM PLATE, BRIGHT CHROME	48.80
900 091	HANDLE, BRIGHT CHROME PLATE	57.90
900 093	GASKET FOR SLEEVE	15.10
900 094	GASKET, TRIM PLATE	15.10
900 095	NAME PLATES, TRIM ENG W/CSA LOG	32.70
900 096	HANDLE BUTTON	15.10
900 102	FACEPLATE KIT, CHROME FINISH	203.70
900 105	HANDLE KIT, CHROME W/O STOP	143.50
900 107	HANDLE KIT WITHOUT STOP	132.10
900 108	KNOB KIT, ACRYLIC W/O STOP	99.40
900 109	STEM EXTENSION KIT	148.60
900 118	FOR MILWAUKEE FAUCET	49.50
900 120	ROUGH IN GUIDE FOR 900	15.10
900 123	MOUNTING BRACKET	28.30
900 132	SLEEVE FOR 909/910 BILTMORE	46.50
900 140	PLUG BUTTON, SERIES 900	21.70
900 141	PLUG BUTTON, SERIES 410 & 420	15.10
900 197	OUTLET SEALS	15.10
900 216	SPRING, .300 O.D., .375 LG	15.10
900 219	BONNET	15.10
900 231	THROTTLING STEM ASSEMBLY	27.60
900 240	CHAMBER REPAIR KIT, BAL.MDL3	156.30
900 259	BALANCE CHAMBER ASSEMBLY KIT	156.30
900 268	SLEEVE KIT, LARGE	52.70

Part No.	Description	List Price
900 269	BILTMORE SLEEVE KIT FOR MODEL 3	103.30
900015A	BONNET ASSEMBLY	102.50
900015B	900 BONNET,MACHINED	41.60
900017A	BONNET NUT	57.90
900020A	DIAL ROUND W/CSA LOGO	191.20
900031A	BAL CHAMBER REP KIT MODEL 1	311.00
900096BP	HANDLE BUTTON BP. QTY= 25	113.90
975170A	1/2" VOLUME VALVE CONCEALED	895.80

IntelliStation™ Replacement Parts

Part No.	Description	List Price
88006470	CONTROLLER	1,793.00
6551624	CONTROLLER, UPGRADE KIT IOT (IS JR)	2,660.00
81019061	TEMPERATURE SENSOR W/WIRE	67.60
6551690	3/4 INCH 3-WAY VALVE AND ACTUATOR KIT (IS JR)	6,703.00
6551691	1 INCH 3-WAY VALVE AND ACTUATOR KIT (IS JR)	7,683.00
6551692	1 1/2 INCH 3-WAY VALVE AND ACTUATOR KIT (IS JR)	9,639.00
6551693	2 INCH 3-WAY VALVE AND ACTUATOR KIT (IS JR)	11,874.00
81019287	ACTUATOR	3,025.00
81020529	ACTUATOR W/ EXTENDED CABLE	3,025.00
6551290	ACTUATOR (IS JR)	3,025.00
81019288*	150PSI PRESSURE SENSOR WITH WIRE (P)	CF**
88005572	200PSI PRESSURE SENSOR WITH WIRE (P)	653.30
81019289	HIGH-SPEED TEMPERATURE SENSOR W/WIRE	165.50
6551291	TEMPERATURE SENSOR W/WIRE (IS JR)	144.50

***Note: ONLY for models built prior to May 25, 2017**

Notes

Notes

Notes

To locate your nearest Powers representative, please click on our *FIND A REP* locator on PowersControls.com

Represented by:

POWERS™

A **WATTS** *Brand*

USA: T: (888) 432-8932 • PowersControls.com
Canada: T: (888) 208-8927 • PowersControls.ca
Latin America: T: (52) 55-4122-0138 • PowersControls.com

© 2025 Powers