Job Name _____ Contractor _____

Job Location _____ Approval _____

Engineer _____ Contractor's P.O. No. _____

Approval _____ Representative _____

LEAD FREE*

HydroGuard® XP Hi/Lo Master Tempering Valves

Supply Fixture Series LFSH1430 Bottom Inlets/Bottom Outlet – Semi-Recessed Cabinet

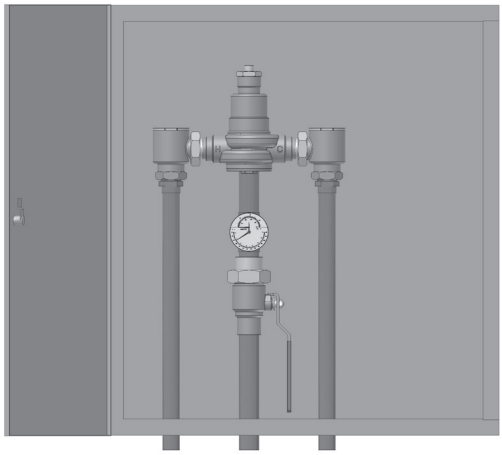

Advanced Thermal Activation

Features

- Features Lead Free* construction to comply with Lead Free* installation requirements.
- Paraffin-based advanced thermal actuation technology to sense and adjust outlet temperature
- Dirt and lime resistant poppet and seat design
- Virtual shutoff if supply pressure fails
- Vandal-resistant locking mechanism to secure temperature setting
- Stainless steel or white painted cabinets
- Factory tested valve and piping
- Rotatable union triple-duty checkstops with filters, dial-thermometer, ball valve
- Rough bronze and chrome finishes

Specifications

Connections	See chart on reverse
Maximum Hot Water Supply Temperature	200°F (93°C)
Minimum Hot Water Supply Temperature**	5°F (3°C) above set point
Minimum Flow***	0.5 gpm (1.9 lpm)
Maximum Operating Pressure	125 psi (861 kPa)
Temperature Adjustment Range****	Standard 90 – 160°F (32 – 71°C) Low 60 – 90°F (16 – 32°C)
Hot Water Inlet Temperature Range	120 – 180°F (49 – 82°C)
Cold Water Inlet Temperature Range	40 – 80°F (4 – 27°C)
Listing/Compliance – (Valve Only)	ASSE 1017, CSA B125

** The wetted surface of this product contacted by consumable water contains less than one quarter of one percent (0.25%) of lead by weight.*
*** With equal pressure*
**** Minimum flow when the valve is installed at or near hot water source w/ recirculated tempered water with a properly sized continuously operating recirculating pump*
***** Note: Low limit cannot be less than the cold water temperature. For best operation, hot water should be at least 5°F (3°C) above desired set point.*

Capacity

Flow Capacity at 50-50 Mixed Ratio								
			Pressure Drop Across Valve					
Model	Min. Flow to ASSE 1017	C_V	5 psi (34 kPa)	10 psi (69 kPa)	20 psi (138 kPa)	30 psi (207 kPa)	45 psi (310 kPa)	60 psi (414 kPa)
LFSH1432	1 gpm 4 lpm	8.54	19 gpm 72 lpm	27 gpm 102 lpm	38 gpm 144 lpm	47 gpm 178 lpm	57 gpm 216 lpm	66 gpm 250 lpm
LFSH1434	1 gpm 4 lpm	19.00	42 gpm 159 lpm	60 gpm 227 lpm	85 gpm 322 lpm	104 gpm 394 lpm	127 gpm 481 lpm	147 gpm 556 lpm
LFSH1435	5 gpm 19 lpm	30.00	67 gpm 254 lpm	95 gpm 360 lpm	134 gpm 507 lpm	164 gpm 621 lpm	201 gpm 761 lpm	232 gpm 878 lpm

Powers product specifications in U.S. customary units and metric are approximate and are provided for reference only. For precise measurements, please contact Powers Technical Service. Powers reserves the right to change or modify product design, construction, specifications, or materials without prior notice and without incurring any obligation to make such changes and modifications on Powers products previously or subsequently sold.

POWERS™
A WATTS Brand

Dimensions

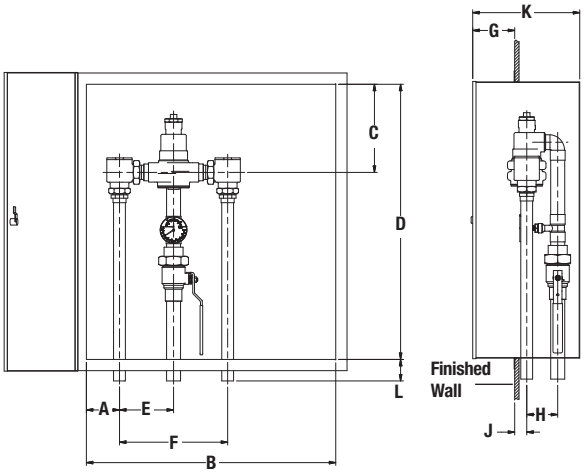

Valve	A	B	C	D	E	F	G	H	J	K	L
LFSH1432	3-½"	20"	9-¼"	24"	4-⅝"	9-¼"	3-½"	2-¾"	1-⅛"	9"	2"
	(89)	(508)	(235)	(610)	(117)	(235)	(89)	(70)	(29)	(229)	(51)
LFSH1434	3-⅞"	29"	10-¼"	32"	6-¼"	12-½"	4-½"	3-⅝"	1-⅜"	12"	2-½"
	(98)	(737)	(260)	(813)	(159)	(318)	(114)	(92)	(35)	(305)	(64)
LFSH1435	4-⅛"	38"	13-⅝"	38"	7-⅞"	15-¾"	4"	4-¼"	2"	13"	2-½"
	(105)	(965)	(346)	(965)	(200)	(400)	(102)	(108)	(51)	(330)	(64)

Note:
Dimensions are shown ±½"
Dimensions in parentheses are in mm

Valve	Inlets	Outlet
LFSH1432	¾" (20)	1" (25)
LFSH1434	1-¼" (32)	1-½" (40)
LFSH1435	2" (50)	2" (50)

Ordering Information

□□□□□□□□–□F□□□□□

Valve — **Order Code**

57 gpm (216 lpm)	LFSH1432
127 gpm (481 lpm)	LFSH1434
201 gpm (761 lpm)	LFSH1435

Finish

Rough Bronze	A
Chrome Plated	C

Piping Inlets/Outlet

Bottom/Bottom	F

Cabinet Style

Stainless Steel, Semi-Recessed	P
Painted, Semi-Recessed	T

View Port — **Order Code**

None	0
Window	W

Alarm System

None	0
Aqua Sentry® 2 Alarm	4

Option

None	0
Cold Water Bypass	2
T/P Gauge on Inlets	4
C/W Bypass & T/P Gauge on Inlets	6

Temperature Range

90°F – 160°F (32°C – 71°C)	S
60°F – 90°F (16°C – 32°C)	W

Recirculation Piping Diagram

Please see Piping Diagram Section of this catalog.

Typical Specification

Cabinet Supply Fixture (CSF) shall be factory assembled and tested and include a stainless steel or painted steel cabinet. CSF shall feature a HydroGuard® XP LFSH1430 series single-valve hi/lo with advanced paraffin-based actuation technology. The valves shall be constructed using Lead Free* brass. Lead Free* brass valves shall comply with state codes and standards, where applicable, requiring reduced lead content. CSF shall also include copper piping, ball valve(s) and temperature/pressure gauge for diagnostics. The tempering valve shall have union check stops, an outlet temperature range of 90 – 160°F (32° – 71°C) (with lockable means), a single seat design for positive shutoff and an approach temperature of 5°F (3°C). Minimum flows to ASSE 1017 shall be LFSH1432 (1.0 gpm), LFSH1434 (1.0 gpm), LFSH1435 (5.0 gpm). Valve shall be a Powers model _____. All alternatives must have written approval prior to bidding.

POWERS™
A WATTS Brand

USA: Tel: (800) 669-5430 • Fax: (847) 229-0526 • PowersControls.com
Canada: Tel: (905) 332-4090 • Fax: (905) 332-7068 • PowersControls.ca
Latin America: Tel: (52) 81-1001-8600 • PowersControls.com

© 2017 Powers