Split System Installation, Operation and Maintenance Manual

Leak Defense System

CRITICAL NOTES for installing the Leak Defense System are highlighted in shaded boxes throughout the document. It is essential these critical notes are read prior to installation.

VERY IMPORTANT!

- Bracing may be required if your plumbing system is unable to support this weight.
- Please contact our Technical Support team to confirm details of the installation to ensure the system will be installed correctly and no water using appliances go unaccommodated.

INSTALLER
Please leave this guide with the homeowner when installation is complete

Need help?
Feel free to call us from 8am - 5pm Monday - Friday
Pacific Time: (866) 410-1134, ext. 2
support@senthydro.com

⚠ WARNING

THINK SAFETY FIRST

Please read carefully before proceeding with installation. Your failure to follow any attached instructions or operating parameters may lead to the product's failure.

Keep this Manual for future reference.

LEAK DEFENSE®
A WATTS Brand

2025-09-30

Congratulations on installing the most advanced system available to protect Homeowners against catastrophic loss due to water damage.

The Leak Defense System monitors the flow of water into your home 24 hours a day, 7 days a week. Should a leak develop, the system will alarm, and, if the leak is not corrected, will automatically halt all water flow to the home before additional damage can occur.

System Overview

The system includes a motorized ball valve, extremely low flow sensors, and a control panel with a touch screen display. If water flow to your home continuously exceeds your system settings for more than your predetermined time, the alarm will sound and the ball valve will close — shutting off water to your home and potentially preventing major water damage. So the principle of the system is continuous water flow over time. Faucets, toilets, and other water fixtures in your house allow for water to start and stop. A leak is the one situation where the water does not stop. The Leak Defense System is looking for this.

System Features

- Constant monitoring of your water system (24 hours per day, 7 days a week)
- Leak detection with on-site audio/visual alarm notifications
- Able to send notifications via email, text, and/or push
- Automatic water shut-off protection to minimize water damage
- State of the art wireless color touch screen control panel
- System retains all settings in memory, even if the electrical power is interrupted
- Calibration and custom settings
- Simple menu driven programming
- Ability to turn water ON and OFF from the control panel, web app, or mobile app
- Patented maintenance-free thermodynamic flow sensors
- Able to connect with other building/home management or security system

Device ID (found on the box, or in the control panel): _____

Serial Number (found on the box, or top of actuator): _____

Installation Date: _____

Installed by Company/Person: _____

Installer Phone Number: _____

Leak Defense System by Intelligent Water Solutions, a Watts brand

Help Line: 1-866-410-1134 ext. 2

M-F 8:00 am to 5:00 pm (PT)

support@senthydro.com

 © 2025 Intelligent Water Solutions by Watts, Inc.

INSTALLER
After installation, review Leak Defense System operation with the owner

Using pages 35-40 of the Owner's Manual section as a guide:

a. Explain the system and use the control panel to demonstrate the various Leak Defense System functions.

b. Encourage the owner to physically interact with the control panel during your demonstration. This will promote a level of comfort and usability.

c. Clearly explain the purpose of the Leak Defense System is to detect and protect from leaks and not to locate the source of leaks.

d. Explain that the Leak Defense System will constantly monitor water flow every day.

e. Explain the importance of using the AWAY scene

1. Explain the difference between the HOME and AWAY scene settings
2. Explain that not using the AWAY scene when the home is unoccupied limits protection to the HOME scene settings.

NOTE: **Take the owner through an alarm scenario as part of the customer education and to test the alarm.**

Testing the proper operation of the system before you leave the property

It is the responsibility of the installing contractor to ensure all shipped parts are installed and the system is working properly prior to leaving the property.

1. Set the system to the Away scene with the shortest time parameters to speed up the test. Run water with enough small trickle of flow from one fixture such as a sink or hose bib until the countdown timer starts counting down on the Control Panel.
2. Ensure that the Valve/Actuator turns off the water, after the countdown timer expires and the water completely stops flowing from the fixture.
3. Ensure that there is no flow showing on the Control Panel (ie, flow drops to zero %), after the valve/actuator automatically turns off.
4. If the system performs as expected, reset the alarms and set the system to the proper scene.
5. Call Tech Support (1-866-410-1134) and take photos of the installation locations of all the devices (CP, Valve/Actuator, APIs) plus the Control Panel Status Page, and text or email them to support@senthydro.com (or their direct number) with the property address so we can forward an insurance certificate of installation to the owner.
6. Assist the owner in connecting the system to the Mobile App.

Owners

There are helpful videos on our website with information that might be more up to date regarding the operation of your Leak Defense System. You can access them at www.leakdefense.com/videos

 © 2025 Intelligent Water Solutions by Watts, Inc.

Table of Contents

Planning and System Preparation **PAGE**

Step 1: Tools and supplies needed 6

Step 2: Pre-Installation survey 6

Installing the Valve/Flowbody

Step 3: Determining the valve location for the Leak Defense System 7

Power & Panel Location

Step 4: Locate an electrical outlet for the valve 8

Step 5: Determine wireless control panel location 8

Installing the Valve/Flowbody

Step 6: Cut a space to accommodate valve/flowbody 9

Step 7: Install Leak Defense System valve / flowbody / spring check valve 9-10

Checks & Programming

Step 8: Connecting to power cables.....11

Step 9: Mount the wireless control panel 11

Step 10: Powering the System 11

The Wireless Control Panel

Step 11: Confirm control panel water shut-off feature ..12

Step 12: Calibrating the system 13

Step 13: Verify and set automatic shut-off features 14

Step 14: Other features / Standby settings 15

Control Panel Dimension Diagrams 16

API-All Purpose Interface v2

Step 15: API-All Purpose Interface 17

API-2 Installations / Wiring Diagrams

Connecting Security System Zone (Normally Open) to API v2 18

Connecting Security System Zone (Normally Closed) to API v2 19

Connecting Security System (Relay Trigger) to API v2 20

Connecting Security System (Positive Trigger) to API v2 21

Connecting Recirculation Pump Switch to API v2 (Standard Wiring for 1 Recirc Pump Switch) 22

Connecting Recirculation Pump Switch to API v2 (Alternate Wiring for 2 to 4 Recirc Pump Switches) 22

Connecting Solid-State Relays (SSR) (for 240V Well Pump) to API v2 23

Connecting a One-Hour, Four-Hour, or Six-Hour Timer to API v2 24

Connecting Irrigation (PAM-1 Relay) to API v2 25

Connecting Your Water Filtration/Softener to the All-Purpose Interface (API) v2 26

Connecting 4-Button Clack Head with 5-20VDC Output to API v2 27

Connecting Water Filtration/Softener with Normally-Open Contact Relay or Microswitch to API v2 28

Connecting Water Filtration/Softener with 20-24VDC/VAC Output to API v2.....29

Connecting External Alarm Inputs to API v2.....30

POLD-Point of Leak Detectors

Step 16: POLD-Point of Leak Detector Installation 31

Diagrams

Figure 1: General System Layout 32

Figure 2: General Piping Diagram 33

OWNER'S MANUAL:

Control Panel overview 35

Setting Home and Away / Turning off the water / Program the system 36

Warning Cycle Feature 37

Alarm is Sounding, What Do I Do? 37

Point of Leak Detectors (POLD) 38

Set up WiFi and web-based app 39

Fine-tuning to your lifestyle 40

Leak Defense System Limited Warranty.....41

QR Codes & Links 44

 © 2025 Intelligent Water Solutions by Watts, Inc.

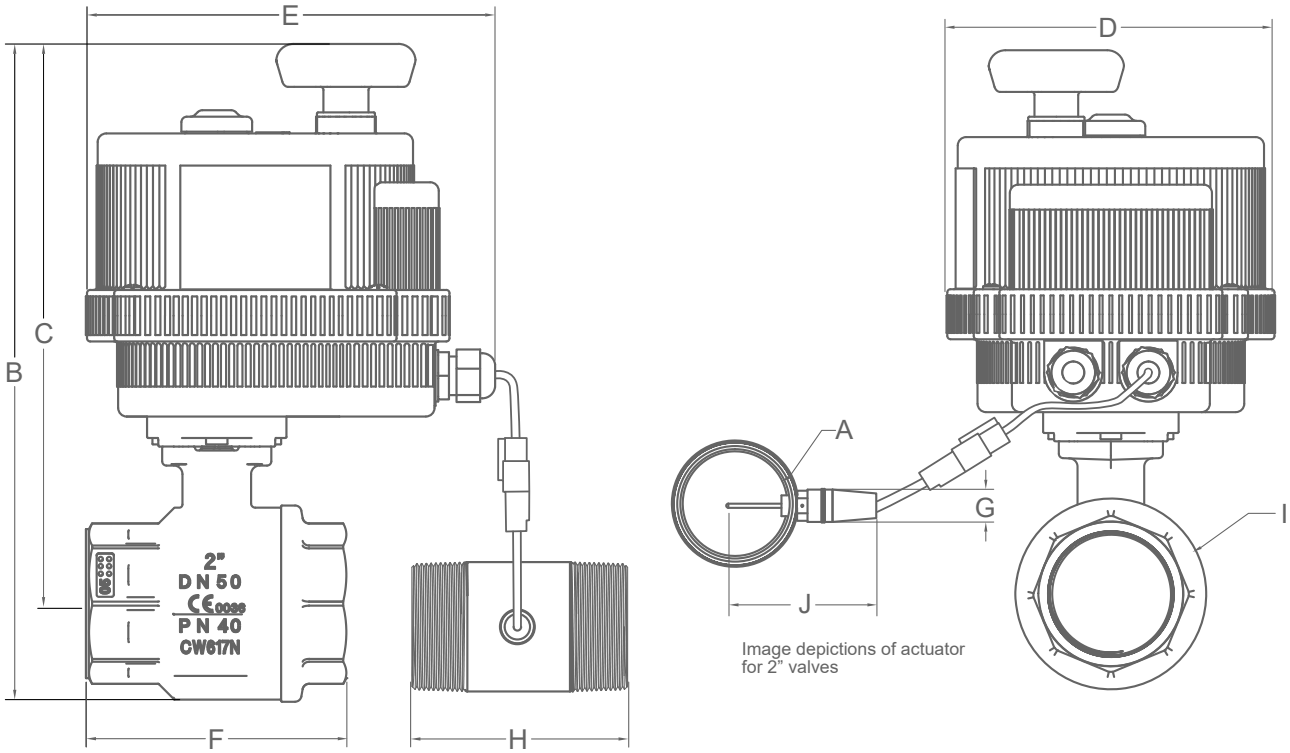

Image depictions of actuator for 2" valves

PN	A*	B	C	D	E	F	G	H	I	J	Weight
LDS-3-075-B1	0.75 (19.1)	7.72 (196)	6.93 (176)	4.84 (123)	6.41 (163)	3.00 (76.2)	.600 (15.2)	4.00 (102)	1.57 (39.9)	2.40 (61.0)	4.60 (2.09)
LDS-3-100-B1	1.00 (25.4)	8.33 (212)	7.36 (187)	4.84 (123)	6.41 (163)	3.35 (85.1)	.600 (15.2)	4.00 (102)	1.93 (49.0)	2.40 (61.0)	5.35 (2.43)
LDS-3-125-B1	1.25 (31.8)	8.63 (219)	7.50 (191)	4.84 (123)	6.41 (163)	3.66 (93.0)	.600 (15.2)	4.00 (102)	2.30 (58.4)	2.40 (61.0)	6.15 (2.79)
LDS-3-150-B1	1.50 (38.1)	9.56 (243)	8.14 (207)	4.84 (123)	6.41 (163)	4.15 (105)	.600 (15.2)	4.00 (102)	2.87 (72.9)	2.90 (73.7)	7.60 (3.45)
LDS-3-200-B1	2.00 (50.8)	12.0 (305)	10.2 (259)	6.18 (157)	7.50 (191)	4.80 (122)	.600 (15.2)	4.00 (102)	3.60 (91.4)	2.90 (73.7)	12.1 (5.49)
LDS-3-250-B1	2.50 (63.5)	14.2 (361)	12.0 (305)	7.28 (185)	7.87 (200)	6.10 (155)	.600 (15.2)	5.00 (127)	4.51 (115)	2.90 (73.7)	18.7 (8.48)
LDS-3-300-B1	3.00 (76.2)	15.0 (381)	12.4 (315)	7.28 (185)	7.87 (200)	6.89 (175)	.600 (15.2)	5.00 (127)	5.35 (136)	2.90 (73.7)	27.1 (12.3)
LDS-3-400-B1	4.00 (101.6)	16.8 (427)	13.57 (345)	8.31 (211)	9.33 (237)	7.84 (199)	.600 (15.2)	5.00 (127)	6.46 (164)	2.90 (73.7)	40.4 (18.3)

*A is Nominal All Fittings are NPT Dimensions: in (mm) Weight: lb (kg)

 © 2025 Intelligent Water Solutions by Watts, Inc.

PLANNING & SYSTEM PREPARATION

STEP 1: Tools and Supplies Needed

I. Pipe cutting, soldering equipment and supplies

II. Tape measure

III. Pipe marking pen

IV. #2 Phillips screw driver

V. 1⁄4" twist drill bit and drill (diameter of no more than .160")

VI. 2 ea. - #6 drywall anchors and screws

STEP 2: Pre-Installation Survey

There are six steps necessary to properly perform a pre-installation survey. These are:

1) Determine the best location for the Leak Defense System valve and flow sensors

The valve must be located downstream of any fire sprinkler system and, ideally, should be located down-stream of all irrigation lines. The valve should be installed up-stream of regenerating filter, softener, booster pump, or whole-house RO while the spring check and flow sensor section should be installed down-stream of those units. The valve/actuator and flow sensor section should be installed in an indoor location free from direct sun and moisture.

If an outdoor installation is required, contact us for alternative solutions that may be more appropriate. 1 (866) 410-1134 -- 8:00am to 5:00pm PT.

2) The systems listed below, while not a comprehensive list, are typical long-water-using-devices that most commonly need to be addressed:

a) Reverse Osmosis Water Purification System

b) Water Softener System

c) Irrigation System

d) Automatic Pool Fill System

e) Outside hose bibs

f) Any other appliance that may automatically use water

3) If any of the above are present down-stream of the Leak Defense System flow sensors, please contact your sales representative for accessories to accommodate these items, or see if you can safely install the system after said items.

4) Determine where a non-switched 120 VAC outlet is in a dry location and determine how you will get the (2 conductor) power wire to the transformer at this location

24 VAC from the transformer should not be run longer than 100 feet. If a longer power wire is needed, it is recommended that a new 120 VAC outlet be installed closer to the Leak Defense System.

5) Determine where the customer would like the wireless control panel and confirm it is within 100’ of where the valve is installed

A standard 120 VAC outlet is required for the 12 VDC Control Panel power supply.

6) A battery backup or generator is recommended for locations that are prone to power outages

ATTENTION INSTALLER!

If this is your first installation, call before installing the LDS and Spring Check Valve.

Otherwise, call after installing for control panel setup: 8:00am to 5:00pm PT | (866) 410-1134 ext. 2

FAILURE TO CALL AND SPEAK WITH ONE OF OUR TECHNICIANS VOIDS ANY WARRANTY ON THE LEAK DEFENSE SYSTEM.

 © 2025 Intelligent Water Solutions by Watts, Inc.

INSTALLING THE VALVE/FLOWBODY

STEP 3: Determining the valve location for the Leak Defense System

The Leak Defense System valve must be installed on the main water line and downstream of the primary shut-off valve, pressure regulator, irrigation line and fire sprinkler line.

Typical location of the Leak Defense System valve installation will be in a garage, basement or crawl space BEFORE the regenerating filter, softener, booster pump, or whole-house RO. The spring check and flow sensor section are to be installed AFTER those units. If the home is on a concrete slab, the valve can be installed in the garage or before water enters the home. In the latter case, the valve should be located at least 18” above grade. It must be protected from direct sun exposure, moisture and freezing conditions.

Other important considerations include:

a. Install the valve in an accessible location allowing easy access for proper installation and maintenance

b. Some water utilities require the valve be a minimum of 18” downstream of the water utility meter

c. If possible, install the valve downstream of a manual shutoff valve to allow for easier maintenance

d. A bypass around the valve is not required but may be recommended

e. Bracing may be required if your plumbing system is unable to support the weight.

FOR LARGER DIAGRAM SEE FIGURE 2, PAGE 33

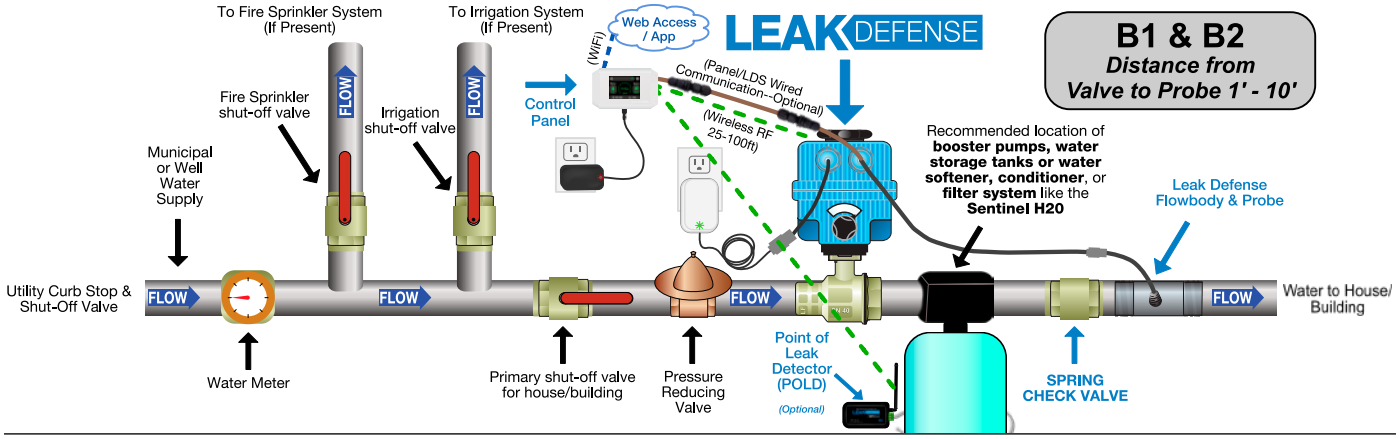

IMPORTANT: If the above diagram does not reflect your actual piping layout, call us for recommendations to accommodate your unique piping configuration and ensure no water inside the premises goes unmonitored. (866) 410-1134, ext. 2 or email support@senthydro.com

IMPORTANT: The valve cannot be installed where it may be submerged in water or exposed to moisture or freezing conditions. An appropriate insulated or water proof box should be installed to protect the Leak Defense System.

Note: If there is a fire sprinkler and/or irrigation system that branches off the building supply downstream of the utility meter, the Leak Defense System valve must be installed on the building supply downstream of the fire sprinkler, and if possible, irrigation supply branch. In no instance may the Leak Defense System be installed in a way that it will interfere with the fire sprinkler system.

Note: The Leak Defense System sees water flowing, but does not differentiate between flow direction (flow in vs. out). As water main pressures fluctuate, there may be a slight flow out of the home/office which will be seen as flow. A backflow preventer valve (spring check valve) is recommended to remedy this. This backflow will usually only be an intermittent or sporadic event, while a leak will have continuous water movement.

 © 2025 Intelligent Water Solutions by Watts, Inc.

POWER & PANEL LOCATION

STEP 4: Locate an electrical outlet for the valve

a. Locate an available 120 VAC outlet close to the valve into which the transformer can be plugged.
Make sure this outlet is not connected to an on/off switch or a GFI.

b. The 120 VAC outlet should not be more than 100 feet from the valve. If a longer power wire is needed, it is recommended that a new 120 VAC outlet be installed closer to the valve.

Critical: The outlet must be located in a dry location or protected with a fully weatherproof cover while the transformer is plugged in.

STEP 5: Determine wireless control panel location

a. The Control Panel should be located inside near the most frequently used door of the home or in an easily accessible area.

b. **Option 1 - Wireless Communications to Valve:**
Make sure there is an outlet within 5' to provide power to the wireless panel with the 12 VDC power supply.

Option 2 - Wired Communications to Valve:
Make sure there is a path to run a CAT6 cable from the primary valve to the Control Panel for communication. Make sure there is an outlet within 5' to provide power to the panel with the 12 VDC power supply.

c. The wireless Control Panel should be located no farther than 100 feet from the Leak Defense System valve. 50' or less is recommended for reliable connection.

d. The standard power supply cable length is 5-6'. For concealing the low voltage cable behind drywall, a hardwire connection with additional cable length is available upon request.

Note: Please install Control Panel at least 8 inches (20 centimeters) from a common use area, per FCC/IC regulations.

Panel for
LDS Valve

Panel for
No LDS Valve (POLD)

Hardwired
Panel to Valve
Option

12 VDC Control Panel
Power Supply

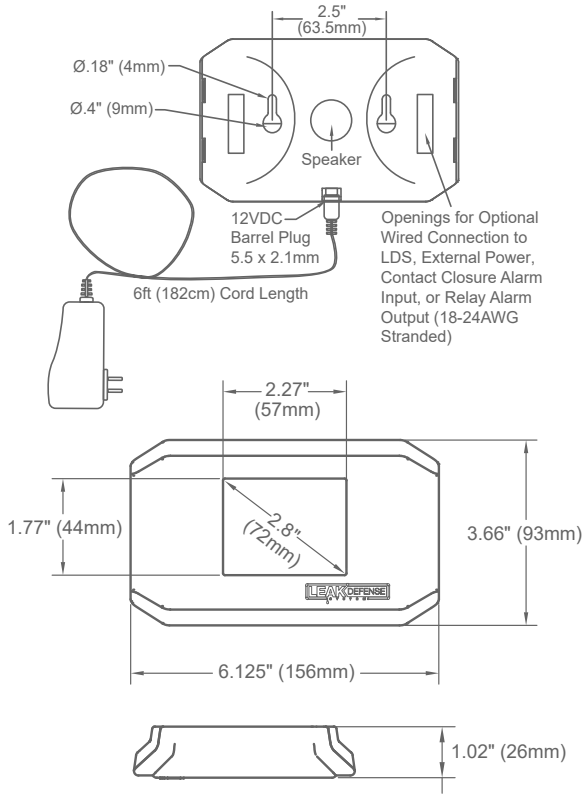

© 2025 Intelligent Water Solutions by Watts, Inc.

INSTALLING THE VALVE/FLOWBODY

STEP 6: Cut a space to accommodate valve before the regenerating filter, softener, or whole-house RO and the spring check & flowbody after

Cut space in existing pipe wide enough to accommodate the valve / spring check / flowbody.

The Leak Defense System - Split System version includes a lead-free brass valve pre-separated from a stainless steel flowbody with flow sensor. The valve and flowbody are designed to be installed in separate sections of the pipe, typically to have the valve upstream of a pre-existing long-water-using device with a regeneration cycle (like a whole-house filter or softener system), but have the spring check and flowbody downstream/after this device.

The Leak Defense System requires existing sections of pipe to be removed to accommodate the valve, spring check, flowbody, and any connectors. The Leak Defense System can accept all common methods of pipe connections including unions, sweat adapters threaded pipe, or lead-free brass unions. Dielectric unions should only be used when connecting galvanized pipe to our system. Installer is responsible to maintain continuity of electrical grounding system per local codes.

Critical: If some form of sweat adapter is used, it is imperative that heat from the torch does not reach the valve/flowbody as this may cause permanent damage to the Leak Defense System unit.

STEP 7: Install Leak Defense System valve / spring check / flowbody

a. Install using standard unions, sweat adapters, or threaded pipe.

b. Do not install in prolonged direct sunlight. This causes water in the valve to heat and the probes will interpret this as water flow.

c. Make sure the flow sensor section has been installed DOWNSTREAM of the filter/softener in the orientation specified on the label (i.e. Vertical or Horizontal) with water flowing in the direction of the arrow on the flowbody. The orientation of the valve does not matter, but it should be installed UPSTREAM of the filter/softener.

Important: Bleed air slowly from the piping system to prevent damage to the Leak Defense System or to any other plumbing fixtures when water flow is restored.

d. Restore water supply.

e. Check for leaks at the valve/flowbody and probe.

Note for Butterfly Valves: If your Leak Defense System contains a butterfly valve, it was intentionally shipped in the partially opened position. Follow any supplemental valve installation documents that may be included.

To prevent binding, open valve 5-10% before star tightening/compressing the fitting screws. Use the attached electric actuator to open valve on first operation.

Plastic manual handle may strip if instructions are not followed and valve is bound.

Note for Flanged: If using flanges, install with SAE J429 Grade 5 or higher flange bolts.

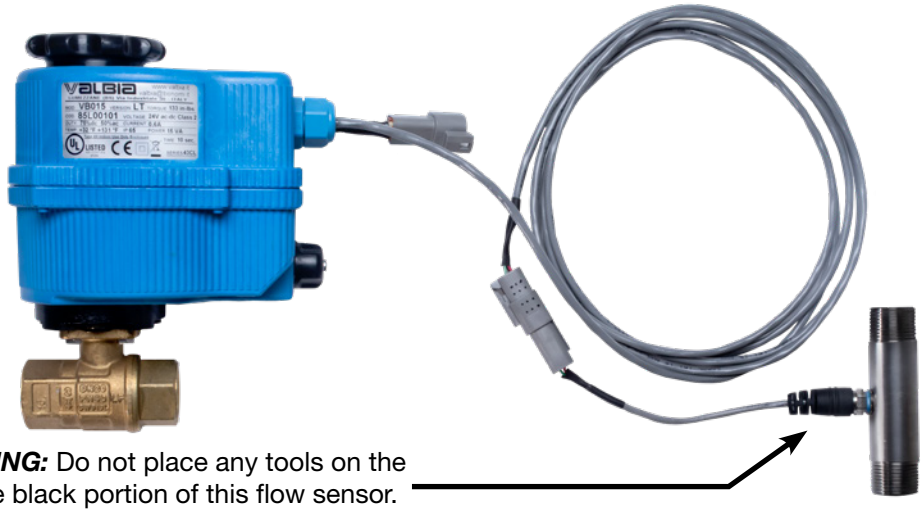

WARNING: Do not place any tools on the delicate black portion of this flow sensor.

 © 2025 Intelligent Water Solutions by Watts, Inc.

STEP 7: Install Leak Defense valve / spring check / flowbody (cont.)

Spring Check Valve

The primary purpose of the Spring Check Valve is to eliminate reverse water flow/bounce detection which is common with irrigation tee-offs, flexible piping, and properties without pressure reducing valves.

- Install Spring Check Valve prior to Leak Defense System and after well/booster pump and bladder tanks.
  Call tech support for alternative recommendations if this is not possible. (866) 410-1134
- Ensure the arrow on the Spring Check Valve and all components match the direction of your water flow.
- Pay attention to location of pipe wrenches, as per diagram.

THIS IS A SPRING CHECK VALVE, NOT A PIPE COUPLING

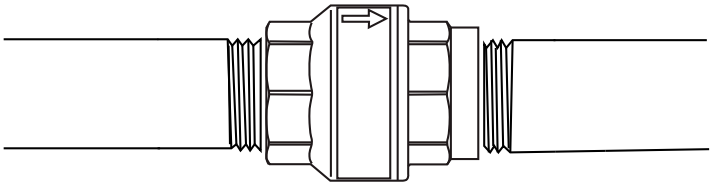

CORRECT VALVE INSTALLATION

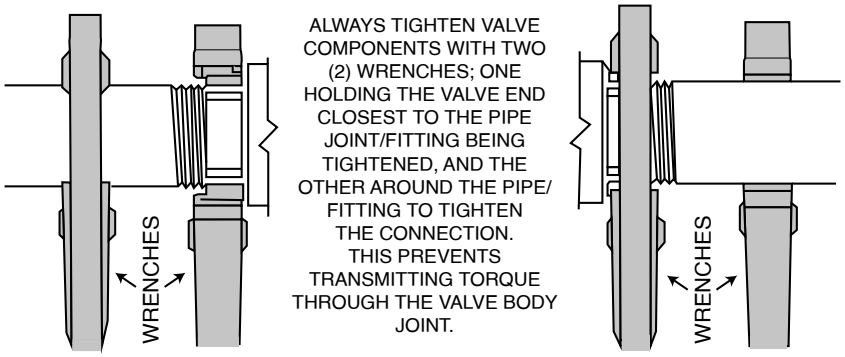

WRONG INSTALLATION PROCEDURE WILL VOID THE WARRANTY

IF WRENCHES ARE PLACED ONLY ON PIPE (BOTH ENDS) NOT ON VALVE, IT WILL TWIST VALVE BODY & CAUSE STRESS CRACKS & WATER LEAKS

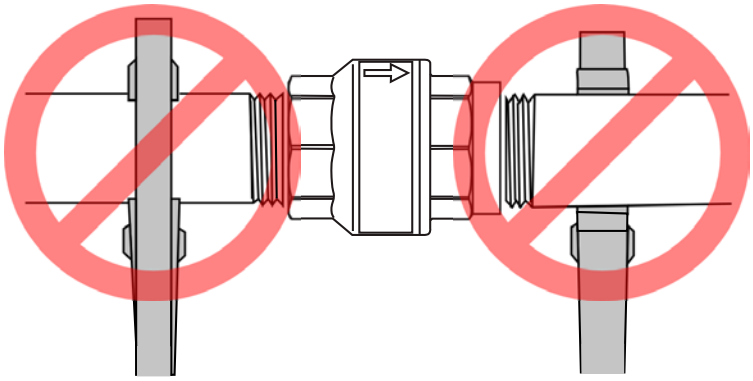

DIMENSIONS

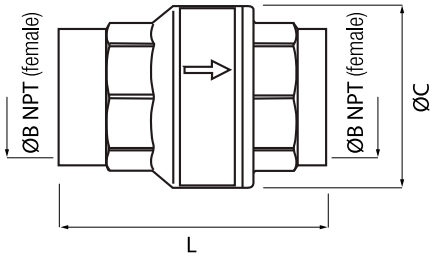

SIZE ØB	L	ØC	Weight Lbs
3/4”	2.48	1.65	0.49
1”	2.85	1.93	0.72
1 1/4”	3.13	2.4	1.19
1 1/2”	3.31	2.87	1.59
2”	3.62	3.44	2.3
2 1/2”	4.37	4.39	4.8
3”	4.86	5.24	6.83
4”	5.45	6.42	11.68

 © 2025 Intelligent Water Solutions by Watts, Inc.

CHECKS & PROGRAMMING

Manual vs. Automatic Valve Position:

WARNING: Valve should be unplugged from power prior to attempting to open/close the valve manually.

Systems 1.5” or smaller have a manual override on the front of the blue actuator. Normal operation requires the dial be positioned in the “AUTO” mode. “MAN” is only to be used when system needs to be overridden manually to open/close the valve. After manually rotating valve via the large black knob on top of actuator, place dial back into “AUTO” position.

Systems 2” or larger, press and hold black knob on top of blue actuator and turn to desired position.

STEP 8: Connecting to power cables

a. Be sure the gray 4 pin probe data connector at the flow sensor is connected before powering on the unit.

b. Connect the 2 or 3 pin gray power connector on the transformer wire to the valve power wire.

c. Make sure wires are connected to the transformer terminals.

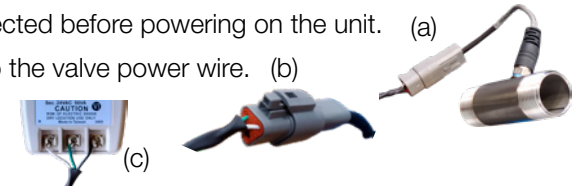

STEP 9: Mounting the wireless control panel directly on a wall

a. Use a pencil to mark the location of the mounting holes in the housing on the wall.

b. Using #6 drywall anchors and screws, place 2 screws 2-1/2” apart, then slip panel onto screws.

STEP 10: Connecting communication cables & powering the system

a. If you purchased the hardwired option *(communications from Control Panel to Valve)* instead of wireless, connect a CAT6 cable from the valve to the corresponding Control Panel.

Assemble the waterproof cord grips at each RJ45 connection, according to diagram below.

Connecting RJ45 Cord Grips

Notice: The CAT6 cable(s) connecting the valve to the Control Panel should run directly from valve to panel.

Do **not** run them through any ethernet hardware.

Technical Support:
1-866-410-1134 M-F 8am-5pm PT

b. Plug the 24VAC valve transformer into the outlet that was located in Step 4. Actuators should fully close & reopen.

c. Plug in the black 12VDC power supply to the Control Panel.

d. Many customers qualify for insurance deductions and require a certificate of installation. We require pictures of all installed components, and pictures of Control Panel home page and status page after calibration (step 12). Send these images to support@senthydro.com or text to your salesperson’s direct number. Include Device ID # and installation address with your text or email.

Optional Power Supply: Should you wish to hide the power supply wire feeding the control panel, an electrician can run the low voltage wire behind the drywall and connect it to screw terminals on the back of the control panel circuit board. This requires the optional hidden wire component.
Contact Sales if desired: sales@senthydro.com 1-866-410-1134

 © 2025 Intelligent Water Solutions by Watts, Inc.

THE WIRELESS CONTROL PANEL

The wireless Control Panel will be used to set up and control your Leak Defense System.

From here you will be able to perform certain tasks like placing your Leak Defense in the **Home**, **Away** or **Standby** Scene. You will also be able to adjust the **Time to Alarm** (continuous time water can flow) in the **Home** and **Away** mode and the length of time you want the Leak Defense to remain in **Standby**. The trip rates for **Home** and **Away** mode are also set here. The main screen will also allow you to Turn Water Off, check the status, and adjust the Leak Defense System.

Please keep in mind that it takes a few seconds for the wireless panel to communicate with the Leak Defense System valve.

Here is how it works

STEP 11:

Confirm control panel water shut-off feature

DESIRED ACTION	ON-SCREEN ACTIONS
Turn water OFF	Main Screen
	Tap the Water button
	When asked “Turn Water Off?” tap Yes
	Valve will start closing and Water icon will turn GREY
	When fully closed Water icon will be YELLOW with a slash
Turn water ON	Main Screen
	Tap the Water button
	When asked “Turn Water On?” press Yes
	Valve will start opening and Water icon will turn GREY
	When fully open Water icon will change to match the color of the scene currently selected. Home = GREEN, Away = BLUE, Standby = ORANGE

 © 2025 Intelligent Water Solutions by Watts, Inc.

THE WIRELESS CONTROL PANEL

Note: Recommended Min mW should be at or slightly above the mW when the valve is closed. Max and Min should be fairly far apart.

Please call Technical Support at 866-410-1134 Option 2 so we can verify and record proper calibration values, to validate the warranty.

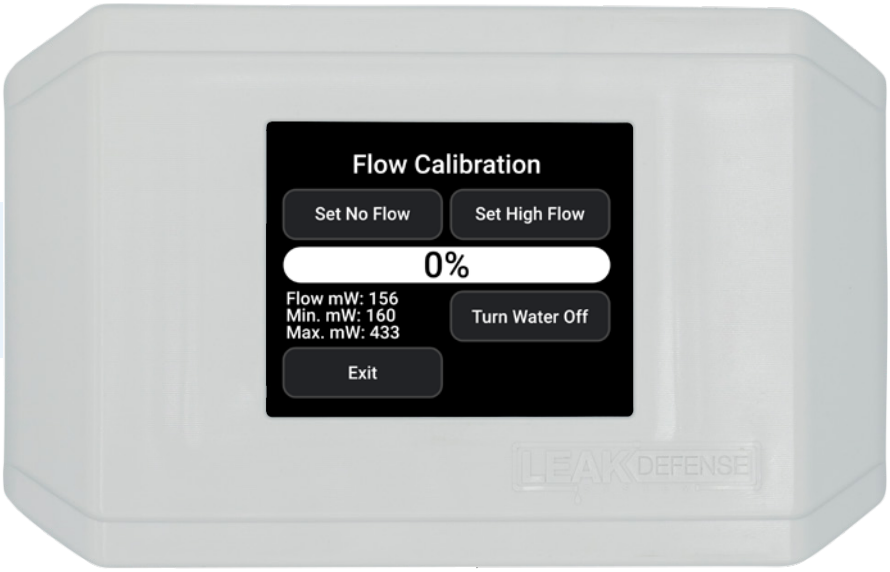

STEP 12:

Calibrate the system

DESIRED ACTION	ON-SCREEN ACTIONS
Calibrating the Leak Defense System	**Main Screen**
Navigating to the Calibration Screen	Tap the Menu ≡ button
	Tap the Advanced ⚙ button
	Tap the Factory button
	Type **65530** on the keypad, then tap the checkmark ✔
	Type **1** on the keypad, then tap the checkmark ✔
	You are now in the **Flow Calibration** screen
Set No Flow	Turn water off (closes LDS valve actuator)
	Once the water has been turned OFF and you are on the Flow Calibration screen, tap the **Set No Flow** button
Set High Flow	Turn water on (opens LDS valve actuator)
	Run water in the building to generate flow (e.g. open a faucet)
	Once the water is ON and running, tap the **Set High Flow** button
	Turn off faucet *(leave the LDS water set to On)*, observe the flow bars. Water % will lower to 0% after several seconds
	If it does not, you may have water running or a leak

The most common sources of flows that could be identified as leaks are leaky toilet flappers, leaking seals in faucets, bad rubber washers in hose bibs (outdoor water hose spigots), and evaporative type humidifiers.

 © 2025 Intelligent Water Solutions by Watts, Inc.

THE WIRELESS CONTROL PANEL

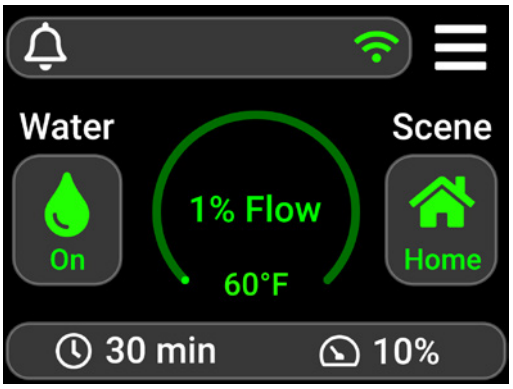

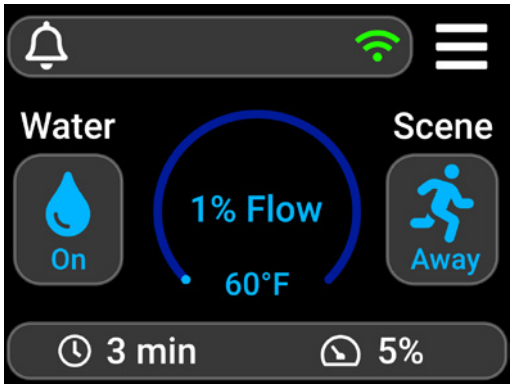

STEP 13:

Verify and set automatic shut-off features

DESIRED ACTION	ON-SCREEN ACTIONS
Setting Trip Rate % – HOME Scene Trip Rate = Sensitivity or the amount of water flow needed to trigger time to alarm	Main Screen with Scene set to **Home** **(Water, Flow,** and **Scene** symbols are GREEN)
	Tap the **Trip Rate** icon
	Enter trip level percentage between 1 and 100
	Tap the checkmark ✔ to confirm trip level setting (Factory default is 10%)
Setting Time to Alarm – HOME Scene Time to Alarm = The amount of time water is allowed to flow for before the valve closes	Main Screen with Scene set to **Home** **(Water, Flow,** and **Scene** symbols are GREEN)
	Tap the **Time to Alarm** icon in the bottom left
	Enter the time in minutes
	Tap the checkmark ✔ to confirm the programmed time
	(Can be set from 1 minute to 4 hours based on customer's preference. Example: 1 hour = 60)
Setting Trip Rate % – AWAY Scene	Main Screen with Scene set to **Away** **(Water, Flow,** and **Scene** symbols are BLUE)
	Tap the **Trip Rate** icon
	Enter trip level number between 1 and 100
	Tap the checkmark ✔ to confirm trip level setting (Factory default is 10%)
Setting Time to Alarm – AWAY Scene	Main Screen with Scene set to **Away** **(Water, Flow, and Scene** symbols are BLUE)
	Tap the **Time to Alarm** icon in the bottom left
	Enter the time in minutes
	Tap the checkmark ✔ to confirm the programmed time
	(Can be set from 1 minute to 4 hours based on customer's preference. Example: 3 minutes = 3)

 © 2025 Intelligent Water Solutions by Watts, Inc.

THE WIRELESS CONTROL PANEL

Standby Scene allows water to flow without alarming for the entire duration of Standby. Ideally this is used to allow contractors to work without causing the system to alarm or when filling a pool downstream of the system.

STEP 14:

Other features

DESIRED ACTION	ON-SCREEN ACTIONS
Setting the Standby Scene Time	Main Screen with Scene set to **Standby** **(Water, Flow,** and **Scene** symbols are ORANGE).
ATTENTION: Putting the leak defense system in standby means water flowing into the structure is NOT monitored. A leak will go undetected in standby mode.	Tap the **Time** icon in the bottom left.
	Enter the time in minutes.
	Tap the checkmark ✔ to confirm the programmed time.
	(Can be set from 1 minute to 48 hours based on customer's preference. Example: 3 hours = 180)
Alternative method to Turn Water On/ Off, Change Scene, Trip Rate, and Time to Alarm	Tapping the middle of the circular percentage bar brings up a menu with options to **Turn Water On/Off**, Change **Scenes**, and adjust the **Trip Rate** and **Time to Alarm** as well as check the **Status** of the system. 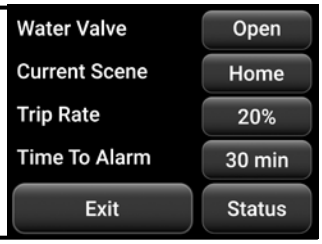
Optionally disable POLDs during Standby (example: Cleaning staff can mop floors without risk of water turning off while in Standby) **ATTENTION:** The factory default is to turn water off from any POLD alarm even while in Standby. Disabling POLDs during Standby will leave you unprotected from point of leak alarms during Standby.	If there are POLDs installed, you can choose whether or not they will alarm the system during Standby. In **Menu** ☰ > **Advanced** > **POLD SB**, "**Enabled**" means POLDs will alarm the system during Standby. "**Disabled**" means POLDs won't alarm the system during Standby. In either case, POLDs will still alarm the system in Home & Away mode. 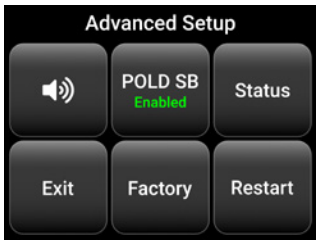

Note: More info on Control Panel usage, settings, and functionality can be found starting on page 35 (Owner's Manual section).

 © 2025 Intelligent Water Solutions by Watts, Inc.

THE WIRELESS CONTROL PANEL

Control Panel Dimension Diagrams

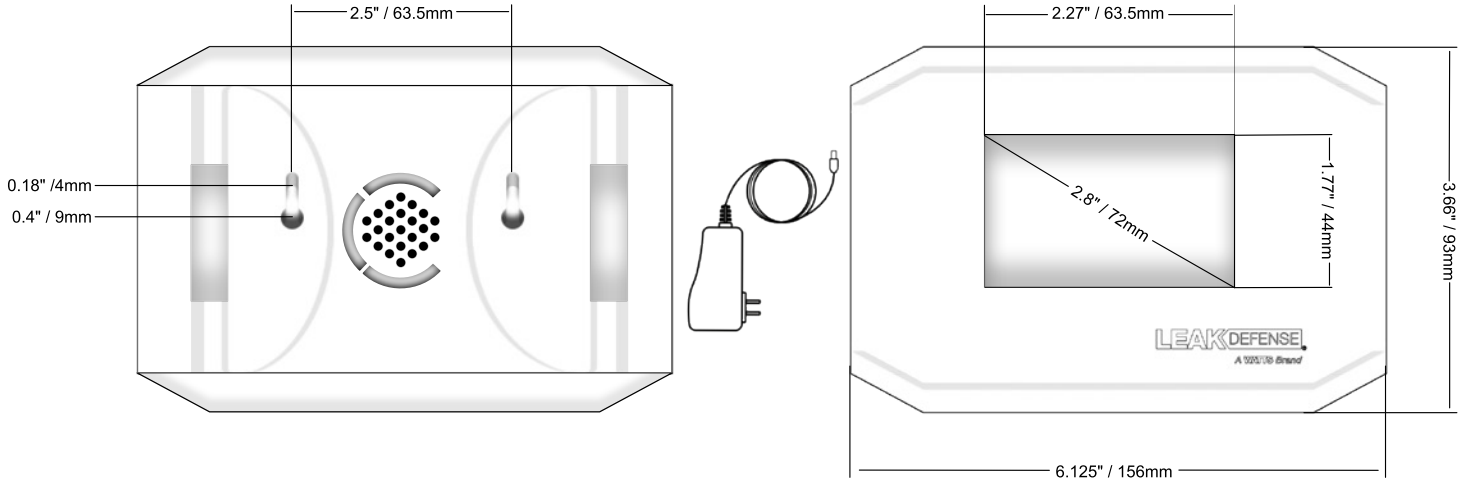

 © 2025 Intelligent Water Solutions by Watts, Inc.

ALL PURPOSE INTERFACE (API-2)

STEP 15: API-All Purpose Interface

The All-Purpose Interface version 2 (API-2), introduced November 2022, is a device that can interface to various accessories to complement the performance of the Leak Defense System, reduce nuisance alarms, and improve the customer's experience and satisfaction with the system. It should be placed within 50'-75' of the control panel to maximize signal strength. Test to ensure proper communication after installation.

Note: For previous API (version 1) wiring diagrams, see legacy documentation on www.LeakDefense.com or call tech support at (866) 410-1134

Included
~6ft (182cm)
12VDC
Power Supply

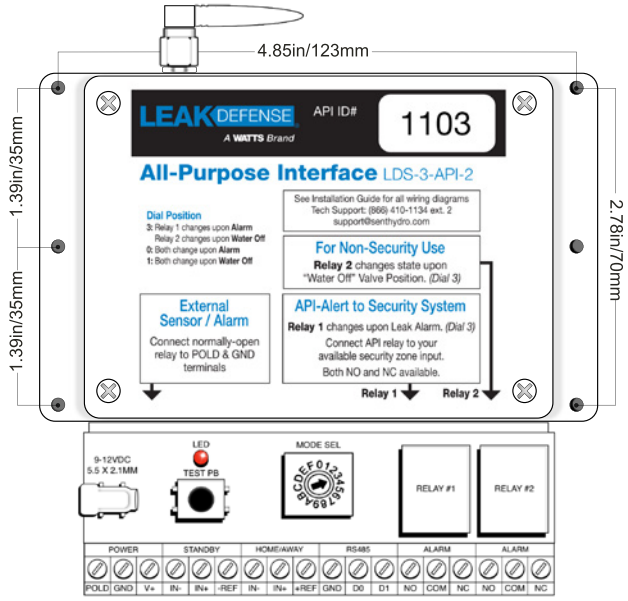

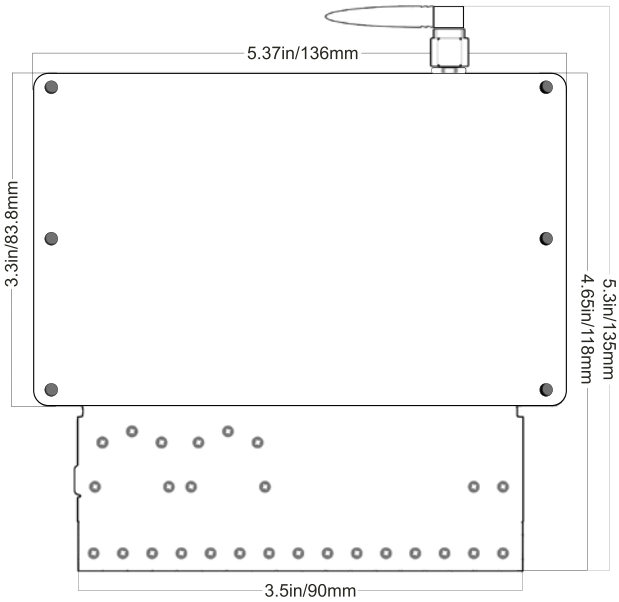

These are the valid MODE SEL dial position settings:

3 - Relay 1 changes upon Alarm
- Relay 2 changes upon Water Off

0 - Both change upon Alarm

1 - Both change upon Water Off

» "Relay changes upon Alarm"

• This means the API relays will activate when the system goes into alarm, and deactivate when the user clears the alarm.

• *In alarm, COM & NO are connected. Not in alarm, COM & NC are connected.*

• This is typically used for Alarm Panels.

» "Relay changes upon Water Off"

• This means the API relays will activate when the system goes into alarm or when the water is turned off (via control panel or web), but relays will only deactivate after the water is turned back on.

• *While the water is off, COM & NO are connected. While the water is on, COM & NC are connected.*

• This is typically used for LDS accessories.

 © 2025 Intelligent Water Solutions by Watts, Inc.

ALL PURPOSE INTERFACE (API-2)

STEP 15: API-All Purpose Interface (continued)

API-2 INSTALLATIONS

Connecting Security System Zone (Normally Open) to API v2

To alarm your security system upon Leak Defense alarm, use either normally open or normally closed zone. The API communicates wirelessly with our Control Panel and can be mounted next to the “brains” of the security system. The API has configurable form-c relays that will activate when our system alarms (based on dial position) to alert an available zone on the security system. The API comes paired and preconfigured for security systems.

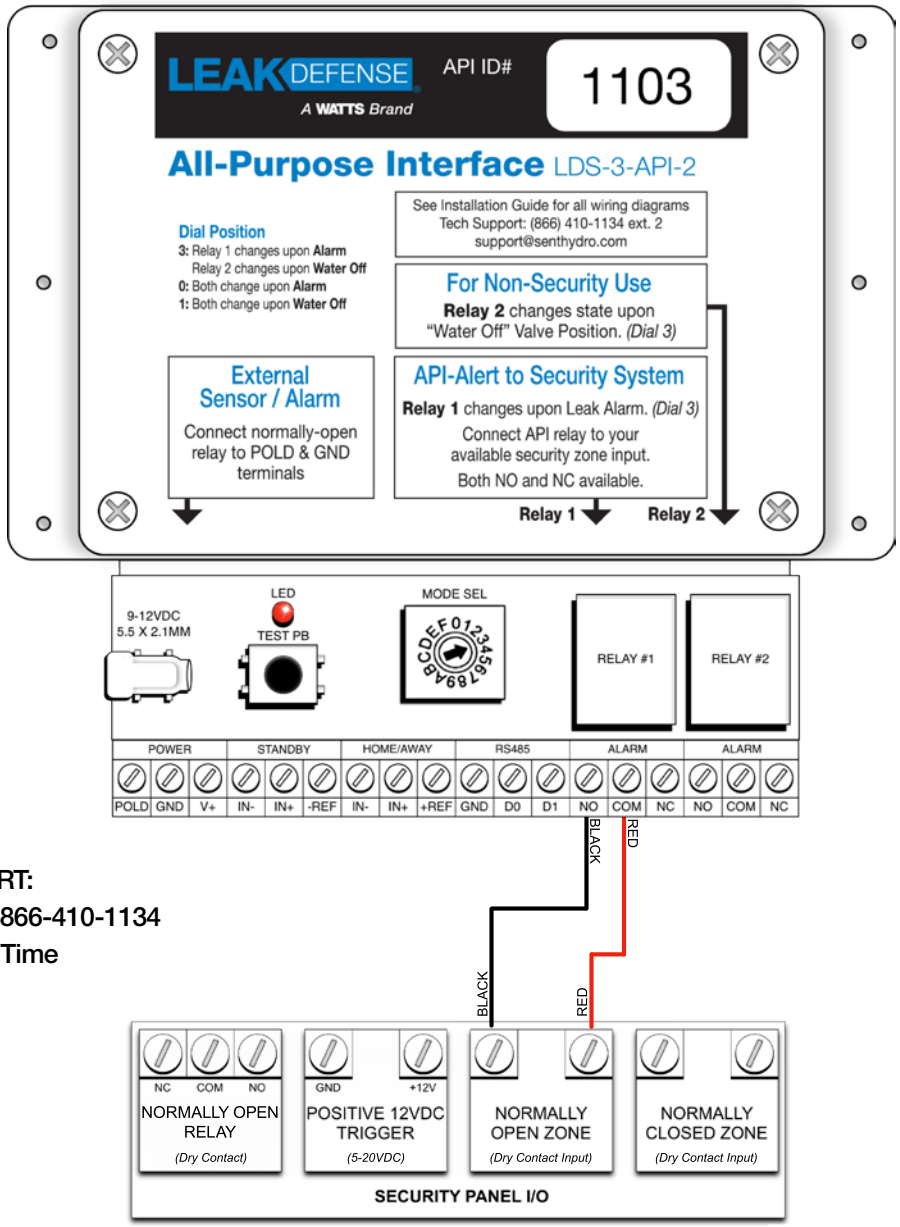

FOR TECHNICAL SUPPORT:
Please call our office at 1-866-410-1134
8:00am to 5:00pm Pacific Time

 © 2025 Intelligent Water Solutions by Watts, Inc.

API-2 INSTALLATIONS (continued)

Connecting Security System Zone (Normally Closed) to API v2

To alarm your security system upon Leak Defense alarm, use either normally open or normally closed zone. The API communicates wirelessly with our Control Panel and can be mounted next to the “brains” of the security system. The API has configurable form-c relays that will activate when our system alarms (based on dial position) to alert an available zone on the security system. The API comes paired and preconfigured for security systems.

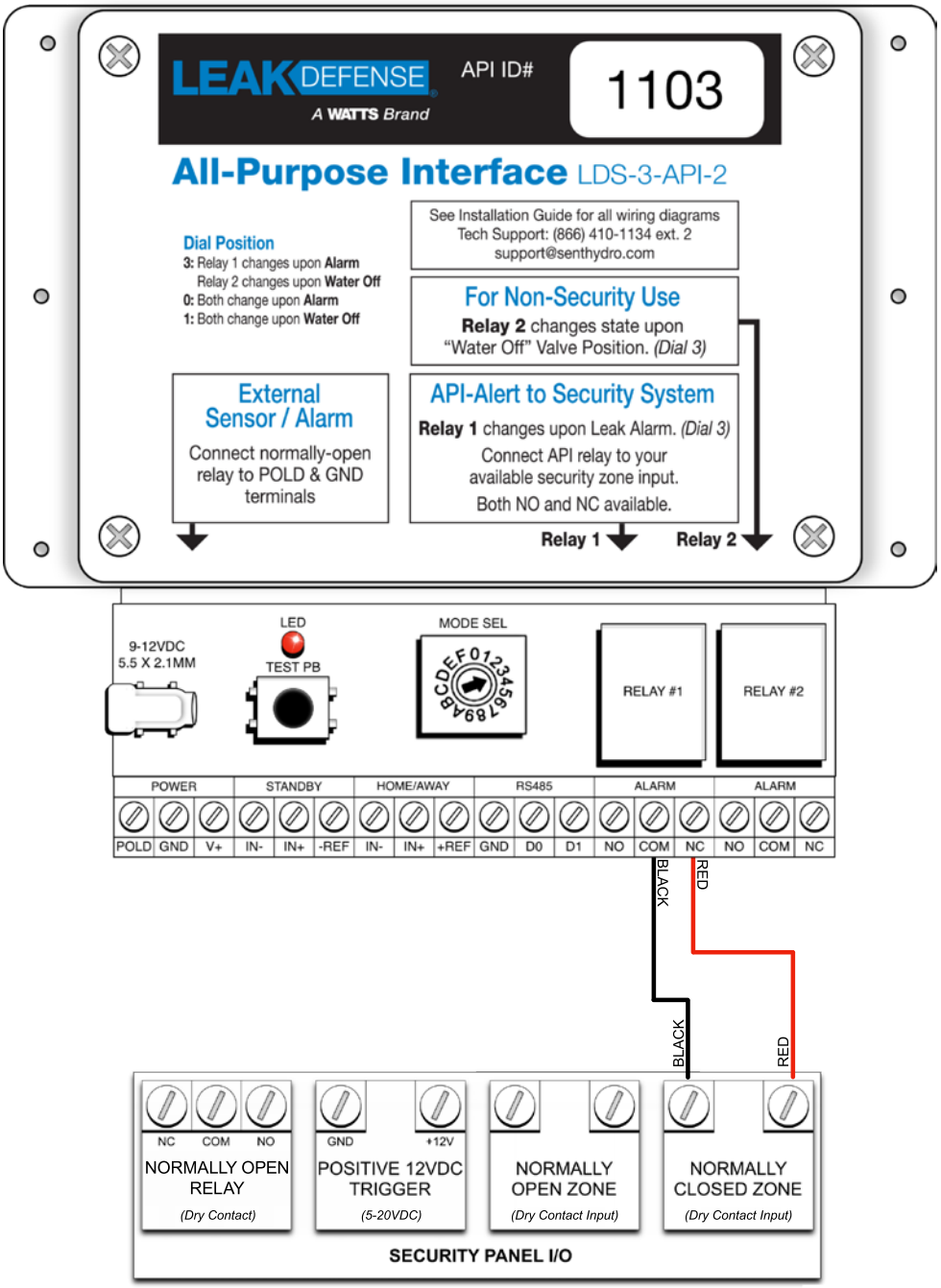

FOR TECHNICAL SUPPORT:

Please call our office at 1-866-410-1134 – 8:00am to 5:00pm Pacific Time

 © 2025 Intelligent Water Solutions by Watts, Inc.

API-2 INSTALLATIONS (continued)

Connecting Security System (Relay Trigger) to API v2

Use one of the next 2 diagrams to automatically sync your security system to the Leak Defense System "Away" Scene when you arm the security system as you leave the home. There are 2 wiring configurations available for this depending on the security system's hardware (see pages 20 & 21).

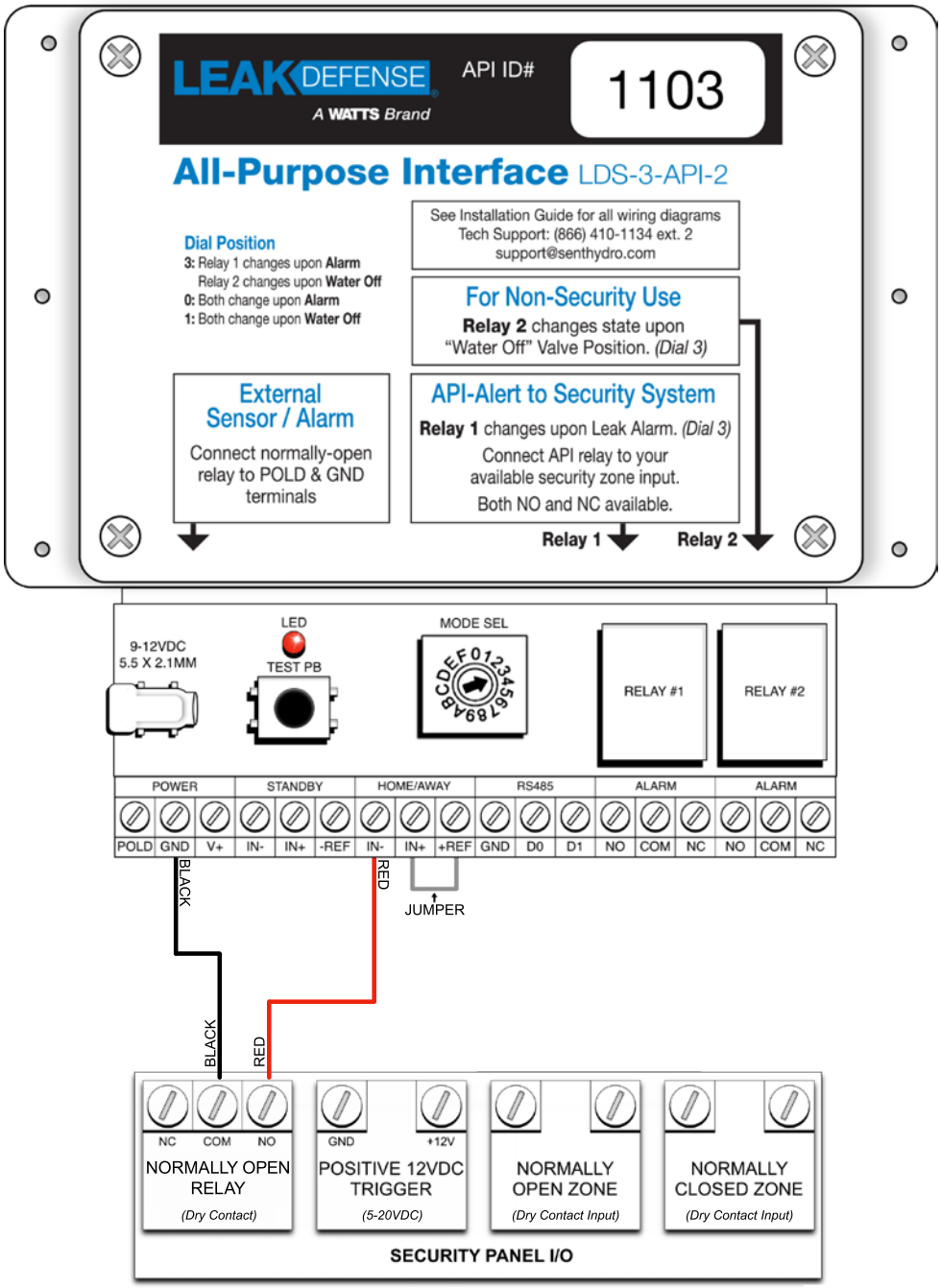

FOR TECHNICAL SUPPORT:
Please call our office at 1-866-410-1134 – 8:00am to 5:00pm Pacific Time

 © 2025 Intelligent Water Solutions by Watts, Inc.

API-2 INSTALLATIONS (continued)

Connecting Security System (Positive Trigger) to API v2

Use one of these 2 diagrams to automatically sync your security system to the Leak Defense System "Away" Scene when you arm the security system as you leave the home. There are 2 wiring configurations available for this depending on the security system's hardware (see pages 20 & 21).

Note: The input voltage must be in range of 5-20VDC when a signal is active.

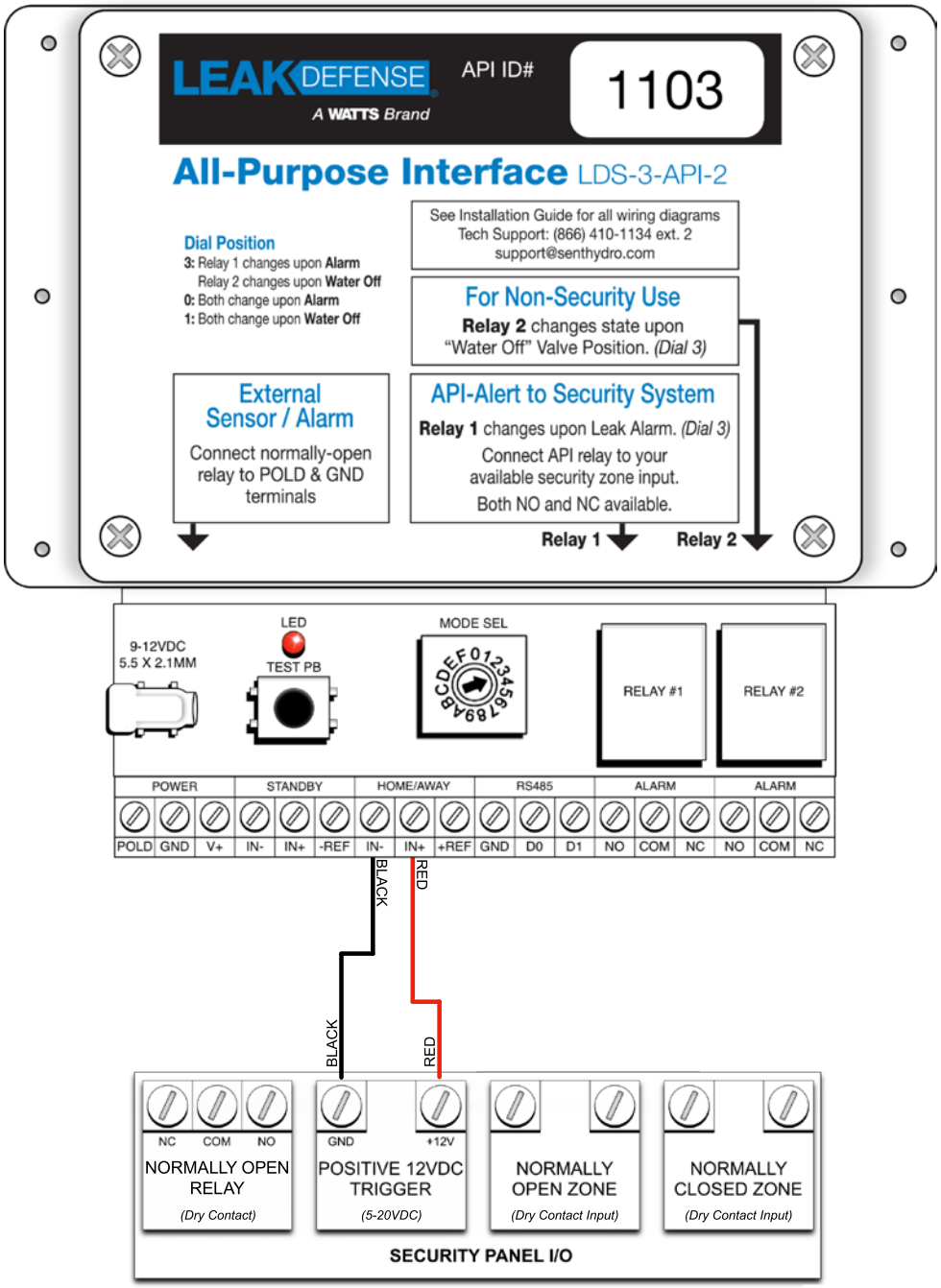

FOR TECHNICAL SUPPORT:

Please call our office at 1-866-410-1134 – 8:00am to 5:00pm Pacific Time

 © 2025 Intelligent Water Solutions by Watts, Inc.

API-2 INSTALLATIONS (continued)

Connecting Recirculation Pump Switch to API v2

This wiring application is typical when a customer desires their hot-water recirculation pump or tankless natural gas hot water heaters to shut off during a leak or valve closure, so the pump doesn't continue to push water making the leak worse, or alternatively to save the pump from burn out due to pumping with no water in the system.

1. Place a jumper wire between +REF and NO on API Relay #2.
2. Connect the red wire from the Recirculation Pump Switch to COM on API Relay #2.
3. Connect the black wire from the Recirculation Pump Switch to -REF.

Note 1: When the API Relay #2 is active, a 12V control signal is sent from the API to the Recirculation Pump Switch, cutting power to anything plugged into the Recirculation Pump Switch.

Note 2: If API loses power or if API loses communication to the Control Panel, the recirc pump (or other plugged in device) will not shut off upon alarms.

Note 3: For alternate wiring for 3 or 4 Recirc Pump Switches, use API dial position 1.

Standard Wiring for 1 Recirc Pump Switch

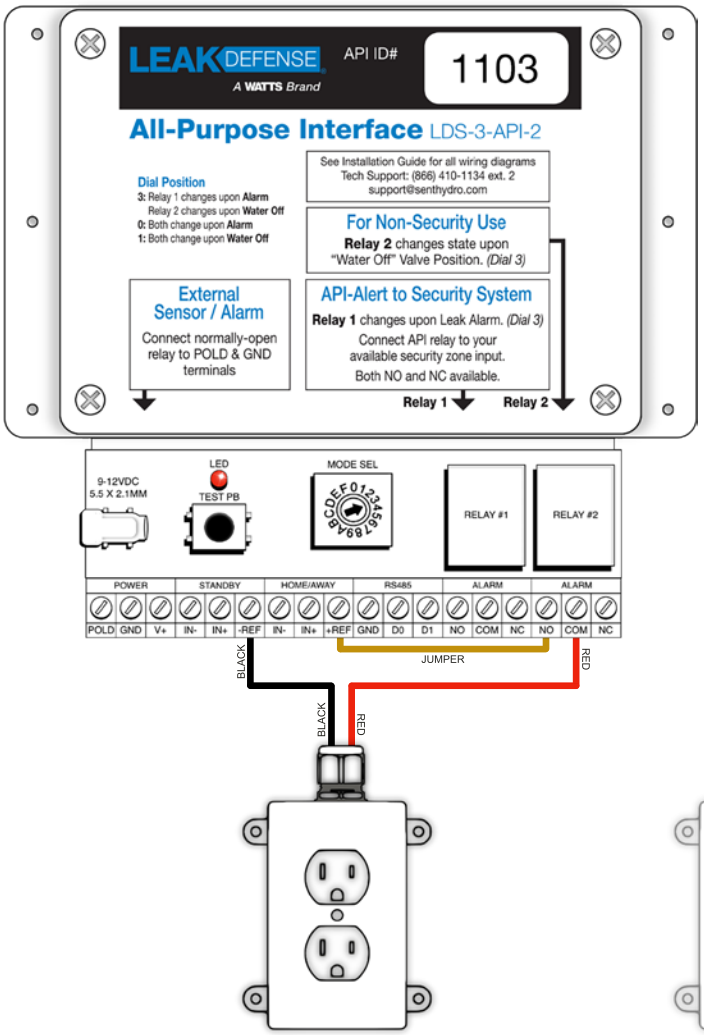

Alternate Wiring for 2 to 4 Recirc Pump Switches

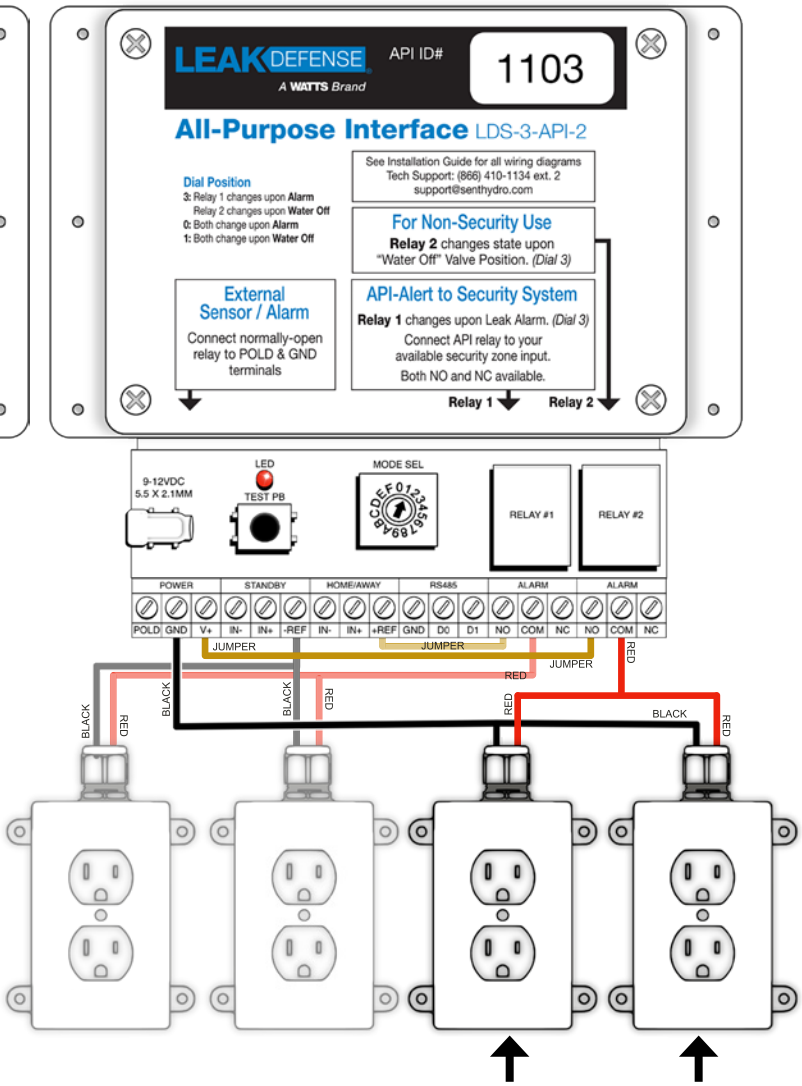

For 2 units, use the above (darker images).

FOR TECHNICAL SUPPORT:
Please call our office at 1-866-410-1134 – 8:00am to 5:00pm Pacific Time

© 2025 Intelligent Water Solutions by Watts, Inc.

Connecting Solid-State Relays (SSR) (for 240V Well Pump) to API v2

This wiring application is typical when a customer desires their 240VAC (up to 12amp) well pump or pressure pump to shut off during a leak or valve closure.

1. Connect the first hot leg of the well pump to Solid-State Relay #1 so that the power source is connected to Terminal 1, then Terminal 2 feeds the well pump.
2. Repeat with the second hot leg for Solid State Relay #2.
   - A 3-phase pump would require a 3rd Solid State Relay *(refer to diagram on the left)*.
3. On the API, place a jumper wire between +REF and NO on Relay #2.
4. Connect API Relay #2 COM to Solid-State Relay #1 Terminal 3.
5. Place a jumper wire (22AWG or larger) between Solid-State Relay #1 Terminal 4 and Solid-State Relay #2 Terminal 3.
6. Connect Solid-State Relay #2 Terminal 4 to –REF on the API.

WARNING: SSRs must be installed by a licensed electrician & protected inside a UL listed safety box appropriate for 240VAC power.
Ensure relays are properly heat-sinked and installed in an appropriate enclosure to dissipate generated heat according to pump load.

Note: If API loses power or if API loses communication to the Control Panel, the pump will not shut off upon alarms.

208-240V Three Phase option

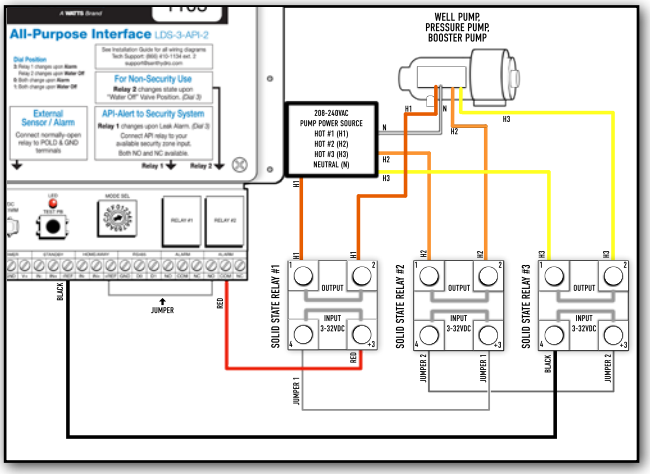

120-240V Single Phase (standard)

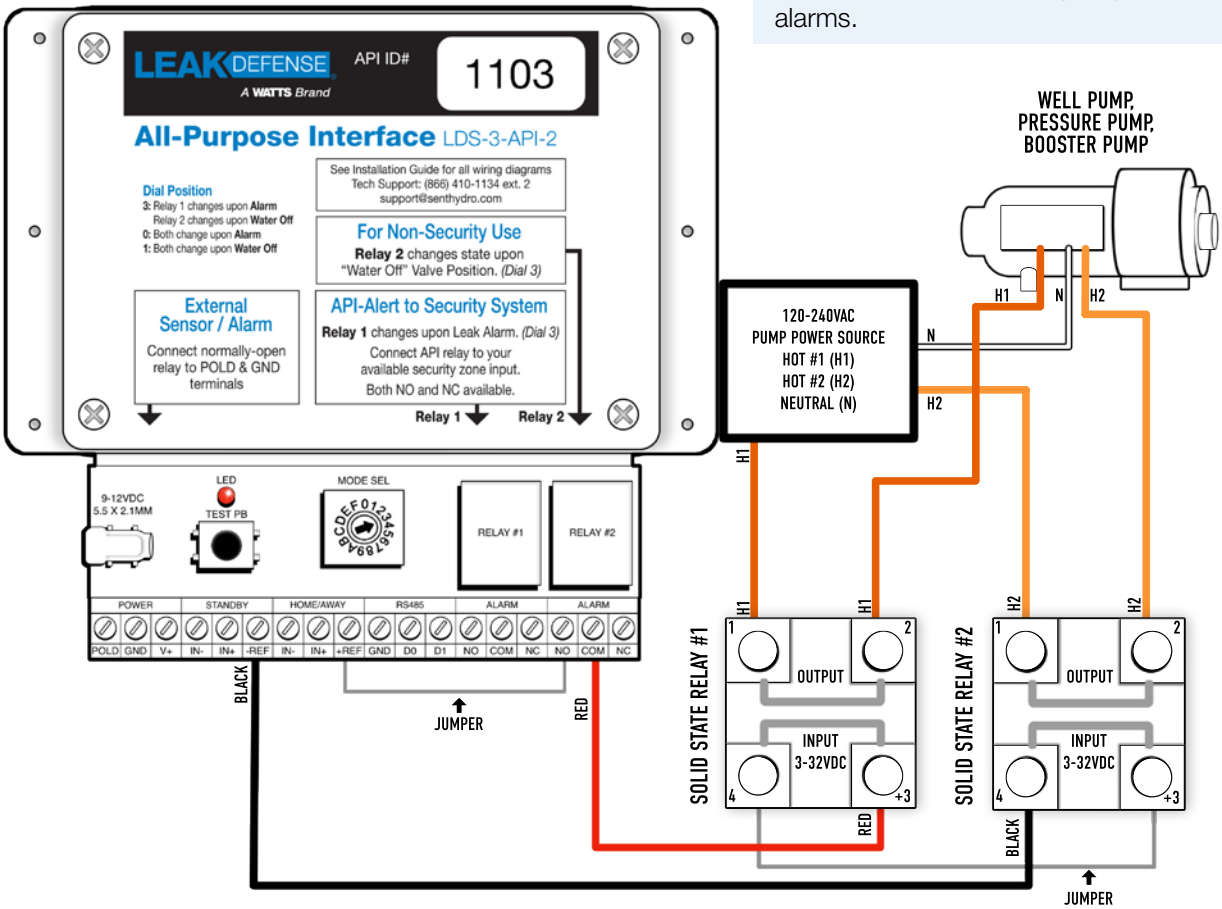

 © 2025 Intelligent Water Solutions by Watts, Inc.

API-2 INSTALLATIONS (continued)

Connecting a One-Hour, Four-Hour or Six-Hour Timer to API v2

This accessory is typically installed outdoors for a gardener or landscaper to temporarily put the Leak Defense System in Standby Scene (ignore water flow) without needing access to the Control Panel.

ATTENTION: Putting the Leak Defense System in Standby means water flowing into the home is NOT monitored. A leak will go undetected in Standby Scene.

1. Connect the red wire from the timer to IN– (below STANDBY).
2. Connect the black wire from the timer to –REF.
3. Place a jumper wire from IN+ (below STANDBY) to +REF.

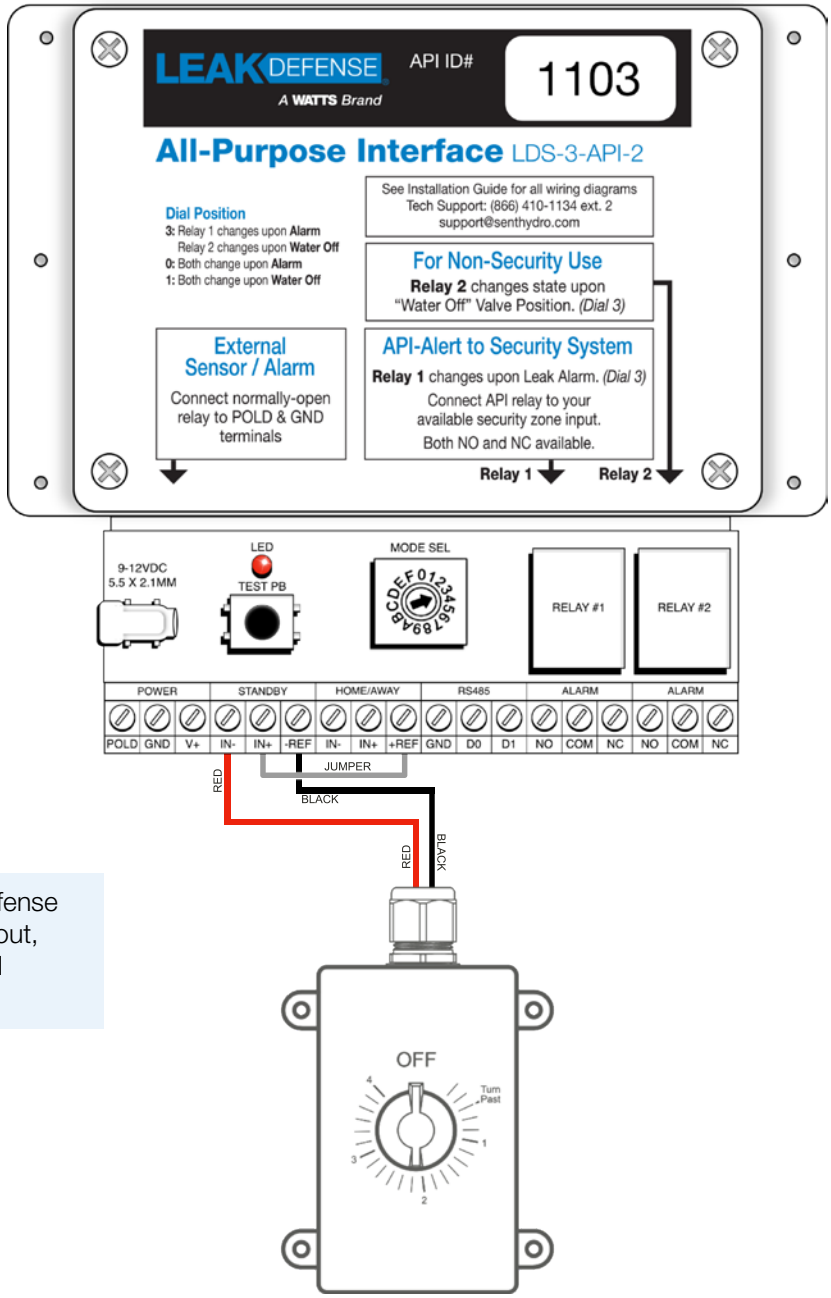

Note: Activating the timer will place the Leak Defense System in Standby Scene. When the timer runs out, the Leak Defense System will revert to its original Scene of Home or Away.

FOR TECHNICAL SUPPORT:
Please call our office at 1-866-410-1134 – 8:00am to 5:00pm Pacific Time

 © 2025 Intelligent Water Solutions by Watts, Inc.

Connecting Irrigation (PAM-1 Relay) to API v2

1. Connect the C wire from the PAM-1 to API IN- (below STANDBY).
2. Connect the N/O wire from the PAM-1 to API –REF.
3. Place a jumper wire from API IN+ (below STANDBY) to API +REF.
4. Connect the 24VDC/VAC wire from the PAM-1 to the MV/P (master valve/ pump) terminal on the irrigation system controller.
5. Connect the Com (0V) wire from the PAM-1 to COM on the irrigation controller.

Note: Activating the irrigation system will place the Leak Defense System in Standby Scene. When the irrigation system stops, the Leak Defense System will revert to its original Scene of Home or Away. You should activate an irrigation controller valve to test that this connection is functioning properly.

ATTENTION: Putting the Leak Defense System in Standby means water flowing into the home is NOT monitored. A leak will go undetected in Standby Scene.

LDS-SSU-PAM
(PAM-1 Relay)

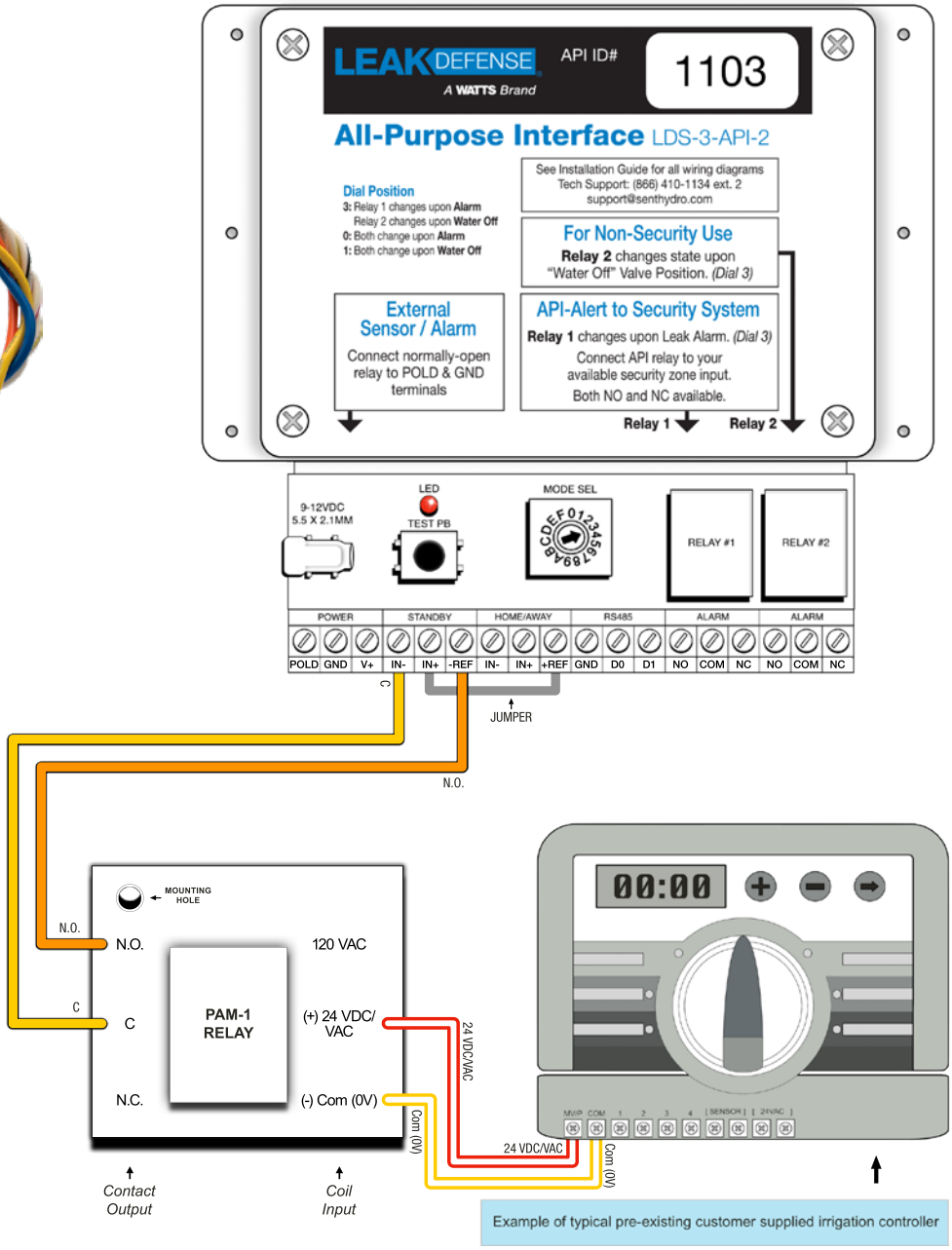

ATTENTION: PAM-1 relays do not have universal wiring colors or locations. This is one example for reference. Ensure your PAM-1 is wired correctly according to wire functions.

FOR TECHNICAL SUPPORT:
Please call our office at 1-866-410-1134 – 8:00am to 5:00pm Pacific Time

 © 2025 Intelligent Water Solutions by Watts, Inc.

Connecting Your Water Filtration/Softener to the All-Purpose Interface v2

For Water Filtration/Softeners (4-button Clack brand), you can connect the output relay on your Clack head to our API, which will trigger Standby during the Clack regeneration cycle. This will cause the Leak Defense System to temporarily ignore water flow during this time, to avoid alarming during long water-usage regen cycles.

For parts to easily modify a Clack 3-button system (without relay) into a 4-button system (with a relay), contact your sales person: (866) 410-1134, sales@senthydro.com

SETUP:

1. Ensure your Clack head is configured to activate the relay during regeneration.
2. Put your Clack head Water Filtration/Softener into a regeneration cycle.
3. Measure the output voltage from the terminals beneath the 4-button cover (DURING THE REGEN CYCLE).

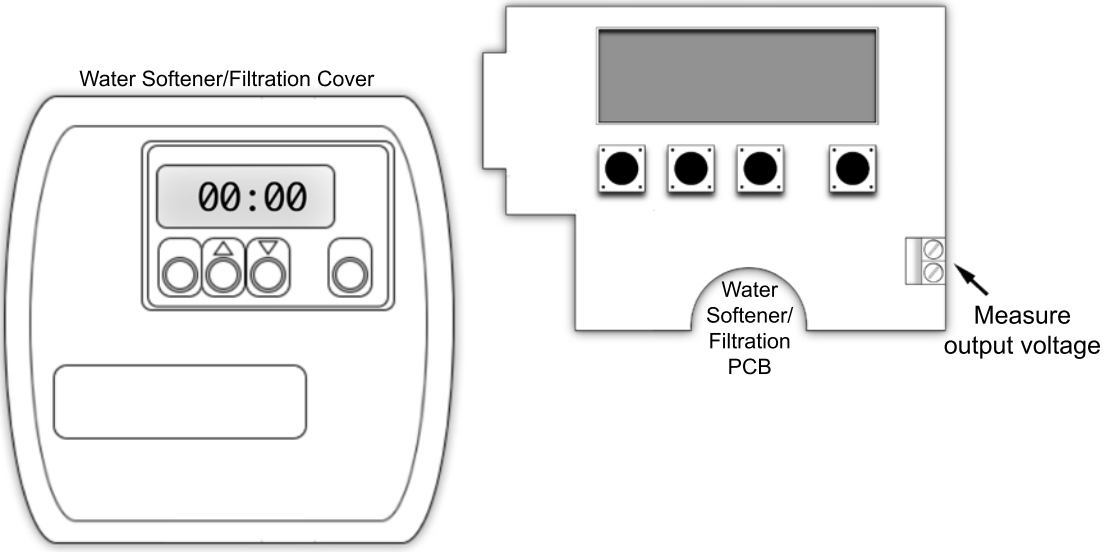

a. For Water Filtration/Softener systems with Auxiliary Output/Relay of **5-20VDC**, which is active during regeneration, use **Page 27**.

b. For Water Filtration/Softener systems with Normally Open **Contact Relay or Microswitch**, which is active during regeneration, use **Page 28**.

c. For Water Filtration/Softener with Auxiliary Output/Relay of **20-24VDC/VAC,** which is active during regeneration, use **Page 29**.

FOR TECHNICAL SUPPORT:
Please call our office at 1-866-410-1134 – 8:00am to 5:00pm Pacific Time

 © 2025 Intelligent Water Solutions by Watts, Inc.

API-2 INSTALLATIONS (continued)

Connecting 4-Button Clack Head with 5-20VDC Output to API v2

For Water Filtration/Softener systems with Auxiliary Output/Relay of **5-20VDC**, which is active during regeneration, use this diagram.
This will trigger Standby Scene (temporarily ignore water usage) on the Leak Defense System during the Clack regeneration cycle.

Note: The API input voltage must be in range of 5-20VDC when a signal is active.

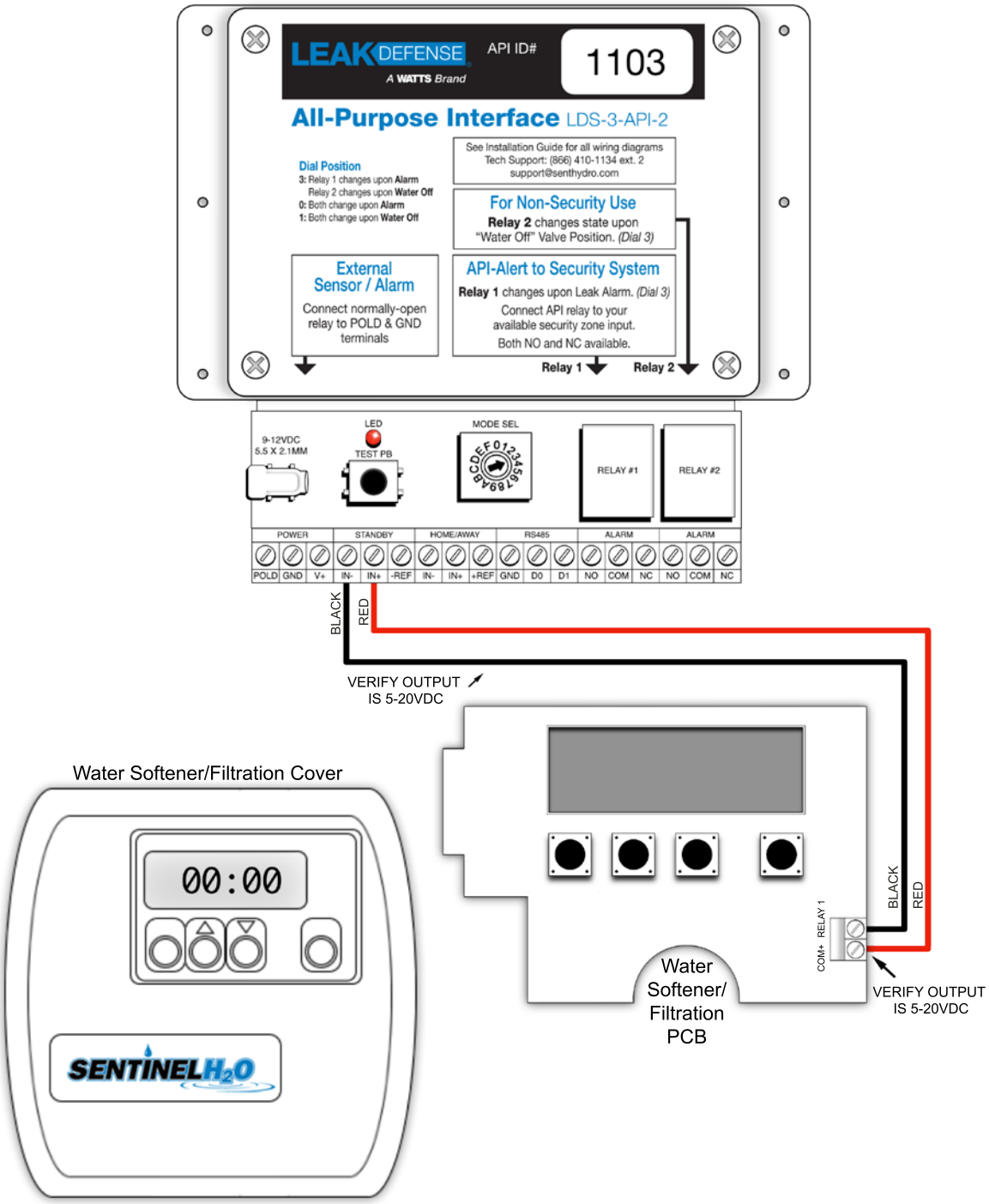

FOR TECHNICAL SUPPORT:
Please call our office at 1-866-410-1134 – 8:00am to 5:00pm Pacific Time

 © 2025 Intelligent Water Solutions by Watts, Inc.

Connecting Water Filtration/Softener with Normally-Open Contact Relay or Microswitch to API v2

For Water Filtration/Softener with **Normally Open Contact Relay or Microswitch**, which is active during regeneration, use this diagram.
This will trigger Standby Scene (temporarily ignore water usage) on the Leak Defense System during the regeneration cycle.

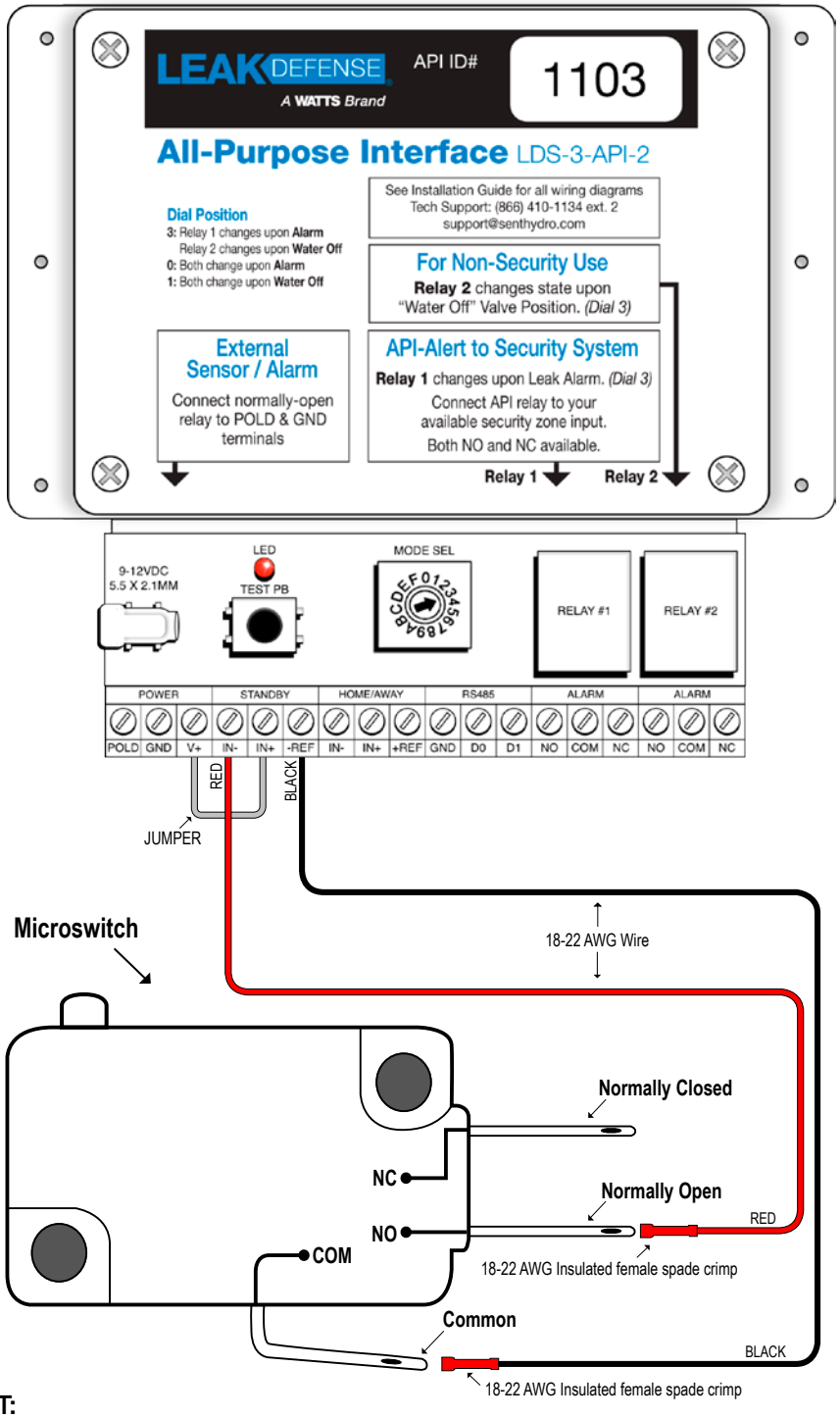

FOR TECHNICAL SUPPORT:
Please call our office at 1-866-410-1134 – 8:00am to 5:00pm Pacific Time

 © 2025 Intelligent Water Solutions by Watts, Inc.

Connecting Water Filtration/Softener with 20-24VDC/VAC Output to API v2

For Water Filtration/Softener systems with Auxiliary Output/Relay of **20-24VDC/VAC**, which is active during regeneration, use this diagram.
This will trigger Standby Scene (temporarily ignore water usage) on the Leak Defense System during the regeneration cycle.

Note: The API input voltage from the PAM-1 relay must be in range of 5-20VDC when a signal is active.

ATTENTION: PAM-1 relays do not have universal wiring colors or locations. This is one example for reference. Ensure your PAM-1 is wired correctly according to wire functions.

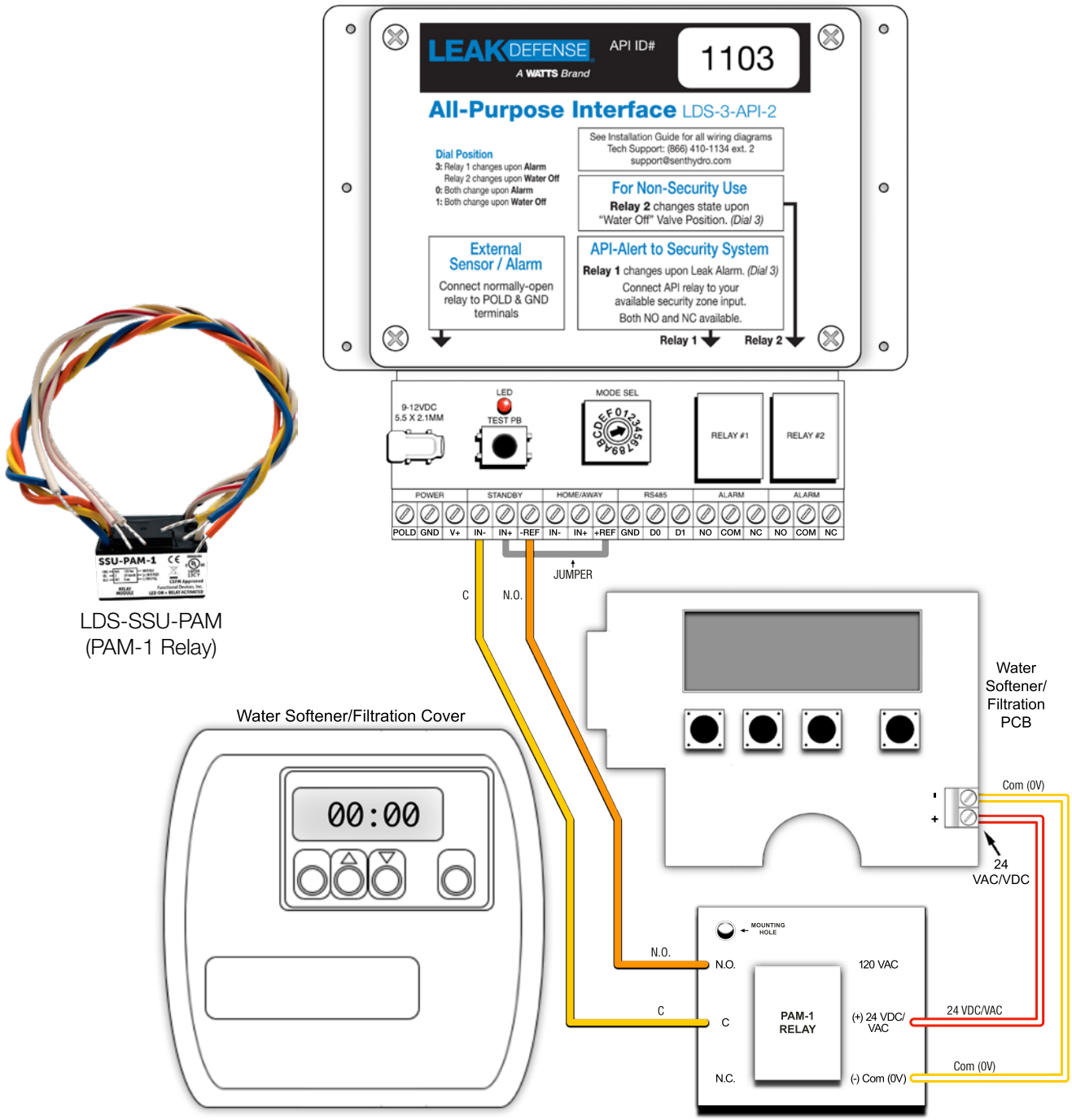

FOR TECHNICAL SUPPORT:
Please call our office at 1-866-410-1134 – 8:00am to 5:00pm Pacific Time

 © 2025 Intelligent Water Solutions by Watts, Inc.

Connecting External Alarm Inputs to API v2

- After a continuous 1 second of active external alarm input, the API will trigger an alarm, causing the Leak Defense System valve to shut off water.
- After the sensor is dried or the input is inactive, wait 5 seconds before pressing Clear Alarm on the Leak Defense System Control Panel.

Note 1: The external alarm input should be Dry Contact when a signal is active.

Note 2: Maximum wire length should be less than 10ft to prevent false alarms.
For more than 10ft, use a 10k resistor between API POLD input and V+ output.
Test after setup to verify no false alarms.

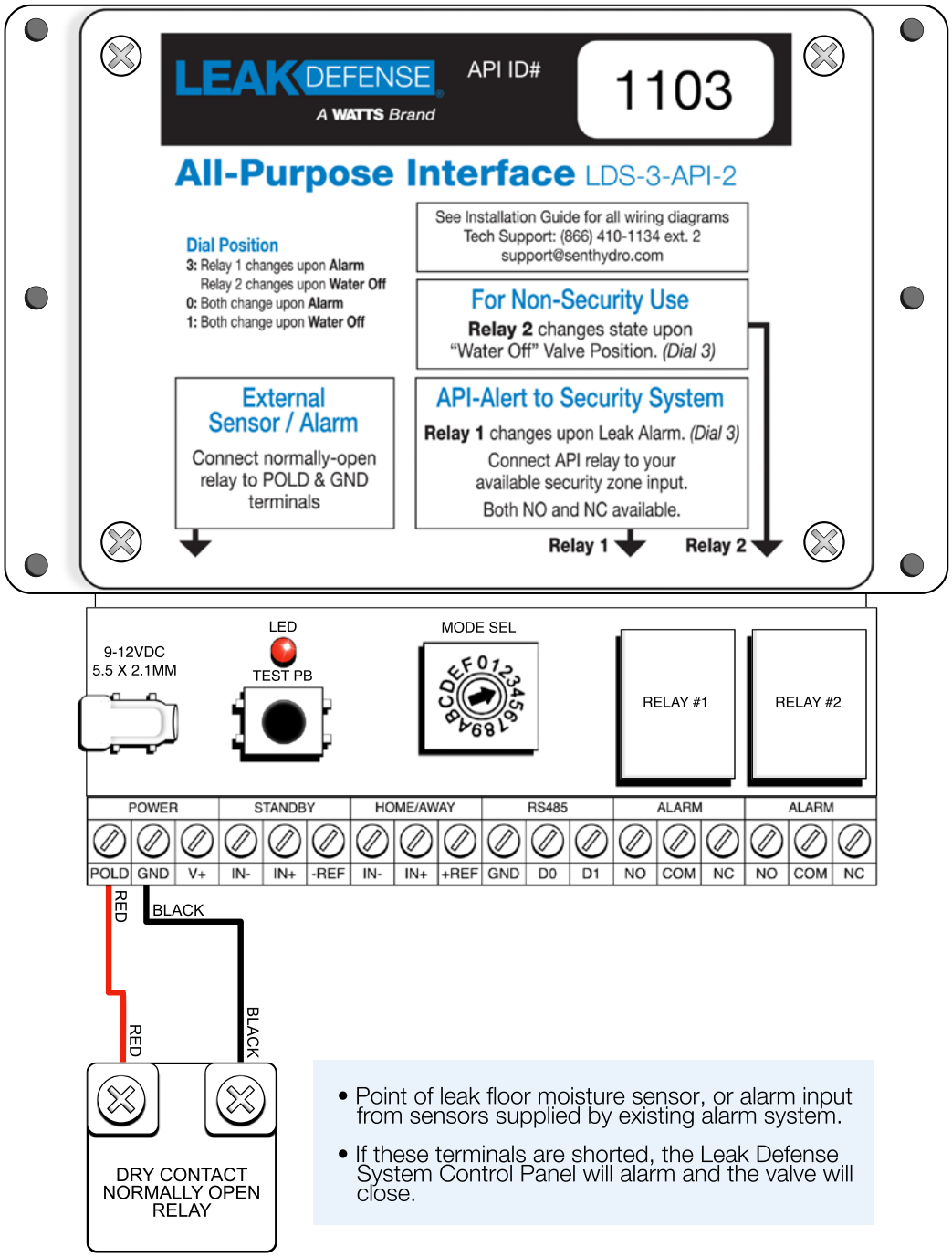

- Point of leak floor moisture sensor, or alarm input from sensors supplied by existing alarm system.
- If these terminals are shorted, the Leak Defense System Control Panel will alarm and the valve will close.

FOR TECHNICAL SUPPORT:

Please call our office at 1-866-410-1134 – 8:00am to 5:00pm Pacific Time

 © 2025 Intelligent Water Solutions by Watts, Inc.

POINT OF LEAK DETECTORS (POLD)

STEP 16: POLD-Point of Leak Detector Installation

The Point of Leak Detector (POLD) can be placed anywhere there's a high risk for plumbing leaks, typically near appliances and fixtures, and will sound an alarm if moisture is detected (more POLD info on page 38) . Adding water sensing cable can extend the area of coverage.

It should be placed within 50'-75' of the control panel (depending on building construction materials) to maximize signal strength. Test to ensure proper communication after installation.

a. Install (2) AAA batteries into the POLD, minding polarity markings inside the enclosure.
   - Remove the battery compartment cover by pressing and sliding down the underside of the POLD.
   - Install the included (2) AAA batteries into the POLD, minding polarity markings inside the enclosure.
   - The left battery should have the positive terminal facing up.
   - The right battery should have the positive terminal facing down.
   - Replace the battery compartment cover.
   - Batteries can last up to 2-3 years, but should be replaced more frequently if the POLD goes into alarm or the Control Panel detects low POLD batteries.

b. Ensure the POLDs are paired to the Control Panel.
   - If the POLDs are purchased and shipped at the same time as the full Leak Defense System, they will already be paired to the Control Panel.
   - If the POLDs are purchased separately, contact Technical Support or follow the supplemental documentation included in your shipment or on our website www.LeakDefense.com

c. Place each POLD in your desired location.
   - If the POLD has sensor pins, ensure they are facing downward toward the floor.
   - If the POLD has Water Detection Cable (WDC), route the cable along likely leak locations (you can use cable tie-downs to keep the WDC in place).

d. Test each POLD to ensure it has communication with the Control Panel.
   - Test the POLD by touching the sensor pins for 3 seconds.
   - Alternatively, get the sensor pins or Water Detection Cable wet temporarily.
   - Verify on the Control Panel or app that there is an alarm from the correct POLD.
   - Dry the POLD, wait 5 seconds, clear the alarm, then test the next POLD.
   - For detailed instructions on clearing the alarm, view page 38.

FOR TECHNICAL SUPPORT: Please call our office at 1-866-410-1134 – 8:00am to 5:00pm Pacific Time

 © 2025 Intelligent Water Solutions by Watts, Inc.

Figure 1

General System Layout

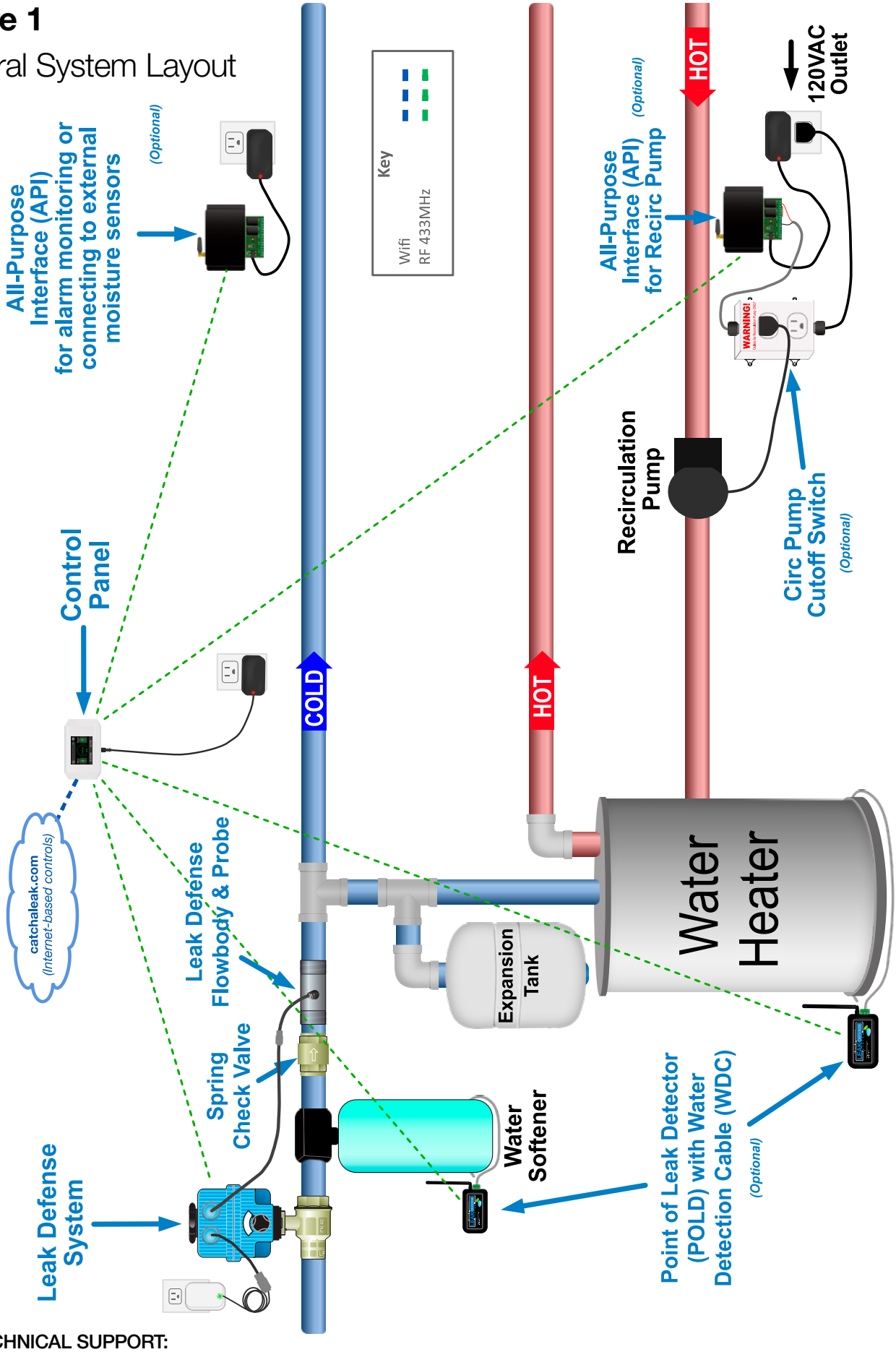

FOR TECHNICAL SUPPORT:

Please call our office at 1-866-410-1134 – 8:00am to 5:00pm Pacific Time

 © 2025 Intelligent Water Solutions by Watts, Inc.

Figure 2

General Piping Diagram

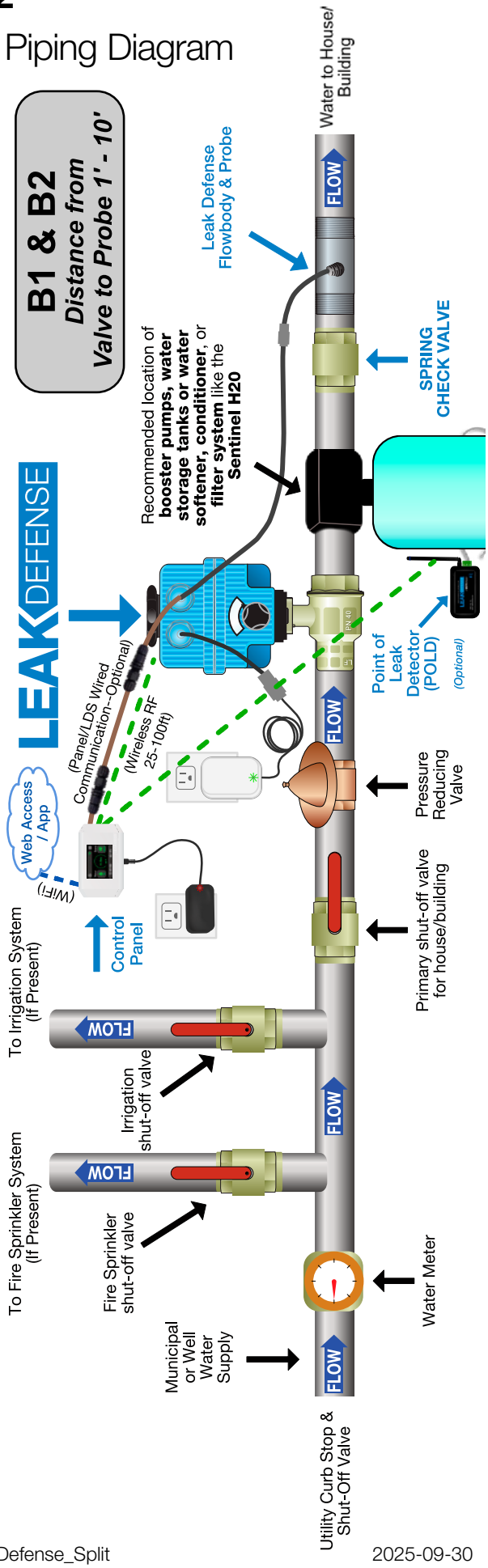

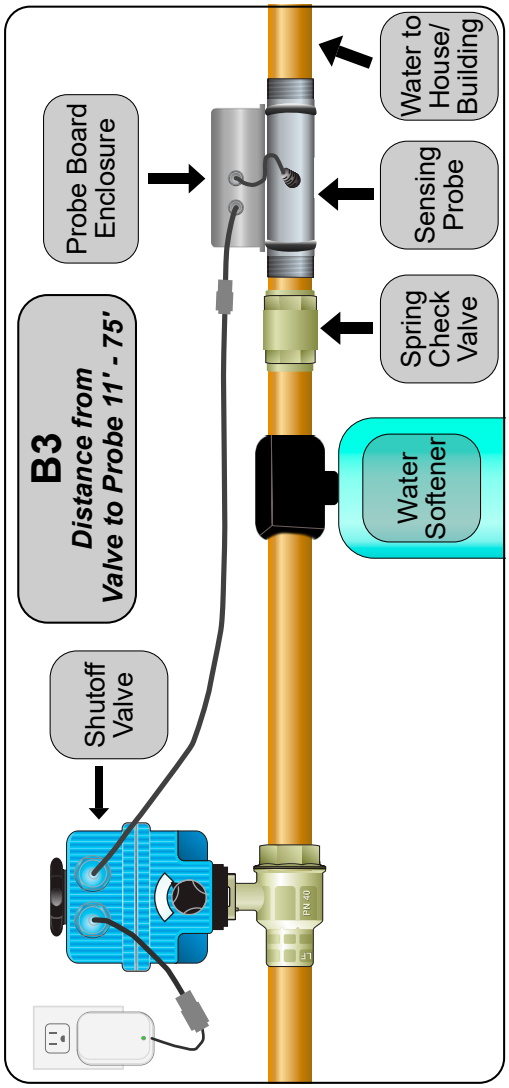

FOR TECHNICAL SUPPORT:
Please call our office at 1-866-410-1134
8:00am to 5:00pm Pacific Time

 © 2025 Intelligent Water Solutions by Watts, Inc.

Owner’s Manual

 © 2025 Intelligent Water Solutions by Watts, Inc.

OWNER'S MANUAL: CONTROL PANEL

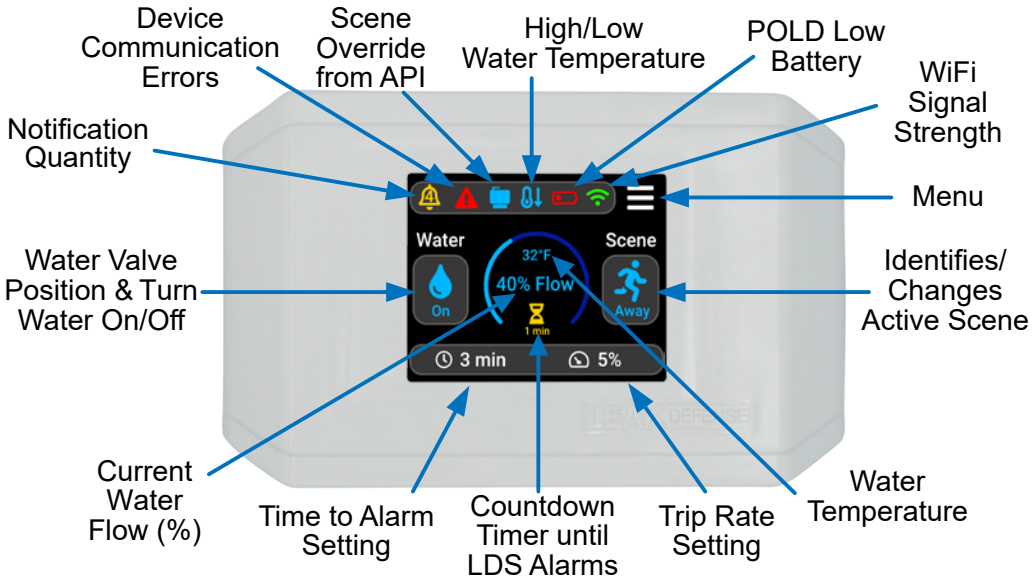

Scene Button:	Allows switching between the following Scenes: Home, Away, & Standby WARNING putting the Leak Defense System into STANDBY may allow a leak to go undetected as it is ignoring all water flowing
Water Button:	Tapping the **Water** button allows you to **Turn Water On/Off**
Time to Alarm Icon:	Tapping the **Time to Alarm** icon allows you to set the amount of time water can flow before the Leak Defense alarms in either the **Home** or **Away** Scene. While in **Standby** this sets the time remaining before **Standby** ends
Trip Rate Icon:	Tapping the **Trip Rate** icon allows you to set the percentage amount of water that can flow before the Leak Defense begins its **Alarm Countdown**. This icon is not visible or changeable while in **Standby**
Flow Arc:	Tapping the middle of the circular flow graph brings up a menu with options to **Turn Water On/Off**, change **Scenes**, and adjust the **Trip Rate** and **Time to Alarm** as well as check the **Status** of the system
Menu Icon:	Tapping the **Menu** button allows you check **WiFi** settings, see connected **Devices**, see **Advanced** Settings, and see the **Help** screen
Notification Icon:	Will turn YELLOW if there is an issue. Shows numerous connection statuses
Comm Error Icon:	Shows if a device has a **Communication Error** (e.g. a POLD, API, or Valve is not communicating with the Panel)
Override by API Icon:	Shows if the current Scene is being set by an **API** (via 4-Hour Timer, Security system, Irrigation timer, Pool fill interface, etc). Will be blue for **Away** scene, orange for **Standby**
Low Water Temp Icon:	Shows if **water temperature** falls below the predefined low temp threshold (default = 1°C)
High Water Temp Icon:	Shows if **water temperature** exceeds the predefined high temp threshold (default = 80°C)
Low POLD Battery Icon:	Shows if the panel detects a **POLD low battery** signal. Note: If POLD is out of range or battery has dropped below operating voltage, no alert will be received
WHEN LDS ALARMS:	When the LDS alarms you will see a red screen indicating the reason why (as well as if your water is off) Press **Silence** to silence the alarm sound while you check for leaks If the cause of the alarm is known, press **Clear Alarm** to turn off alarm sound. You can then follow the prompt to turn your water back on if it is safe to do so

Notice: If a Point of Leak Detector (POLD) is the cause of the alarm, the POLD sensor pins or Water Detection Cable must be dried before you can clear the alarm on the Control Panel or app.
Dry the sensor or Water Detection Cable, then the POLD should stop alarming within 5 seconds.

 © 2025 Intelligent Water Solutions by Watts, Inc.

OWNER'S MANUAL: CONTROL PANEL

Using the Control Panel

The Control Panel screen will normally be dim. Touch the screen anywhere to make it light up. After a period of inactivity the panel will return to dim state. At the main screen you will see a flow arc that will indicate how much water is flowing.

Scene

This button allows you to switch your Leak Defense System from **Home** Scene to **Away** Scene when you are leaving the house or to **Standby** . **Standby** can be used when filling a pool or contractors are working on the house to avoid unnecessary alarms. The icon in the box and color of the icons indicates what Scene you are currently in. Home is GREEN, **Away** is BLUE, and **Standby** is ORANGE.

When you are leaving the house, touch the screen and the Main Screen should be displayed.

If the **Home** Scene is selected, tap the **Scene** button and then tap the **Away** button.

Turn off water

The **Water** button will allow you to shut the water off to your home. Press this button and when asked "Turn Water Off?" tap **Yes**. The valve will close and the **Water** icon will turn GREY. When fully closed the Water icon will be YELLOW with a slash through it.

To turn water back on, simply tap **Water** again and when asked "Turn Water On?" tap **Yes**.

Program the system

Allows the user to customize the system settings. The **Time to Alarm** and **Trip Rate** functions will need to be programmed in both the **Home** and **Away** Scenes when the Leak Defense System is first activated but these settings may be changed or adjusted at any time.
Refer to page 40 for more info and recommendations.

With the **Home** Scene selected you can program the **Time to Alarm** and **Trip Rate** functions by tapping the respective icon. This will allow you to program the time water can continuously flow when you are home, and the **Trip Rate** allows you to set the sensitivity you desire.

With the **Away** Scene selected you can program the **Time to Alarm** and **Trip Rate** functions by tapping the respective icon. This will allow you to program the time water can continuously flow while you are away, and the **Trip Rate** allows you to set the sensitivity you desire.

 © 2025 Intelligent Water Solutions by Watts, Inc.

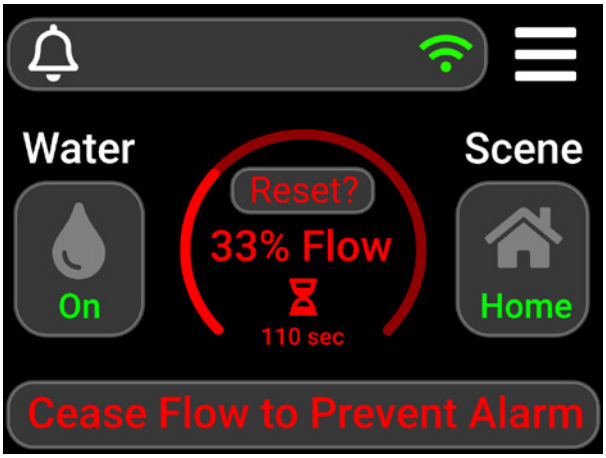

Warning Cycle Feature

In the **Home** Scene, standard Leak Defense Systems have a built in warning mechanism that will let you know that you have exceeded the **Time to Alarm** setting and water is about to be turned off.

When you reach the **Home Time to Alarm**, the system turns the water off for 30 seconds and then re-opens the valve to check to see if water is still flowing. If the water has stopped flowing it resets the alarm clock. If water is still flowing it alarms and shuts off the water.

So, if you are running water and notice that the water flow is significantly reduced or stopped, you will need to turn off the running water for about 60 sec. This will give the system time to turn the water back on and to confirm there is no water flow and that there is not a leak. Then the system will return to normal, resetting the Time to Alarm clock. If the system still sees flow, it will assume it is a leak and will turn off water completely. You can go to the control panel at any time and push the Reset or Clear Alarm button indicating that the flow is normal and reset the system.

The **Warning Cycle** is not available in the **Away** Scene, as the system assumes no one is home and shuts the water off immediately once the time to alarm is reached.

This feature is only available in the Leak Defense System.

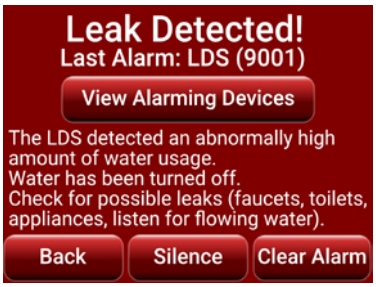

The Alarm Started Sounding and I am Home. What Should I Do?

1. You can press the **Silence** button to stop the beeping alarm on the Control Panel.
2. Look at the **Source** of the alarm. *Examples:*

- "**POLD**" indicates a Point of Leak Detector detected water *(outside the pipe)* directly touching its sensors.

  This indicates a leak that you need to investigate immediately. View page 38 for POLD Alarm instructions.

- "**LDS**" means the Leak Defense System **flow sensor** *(inside the pipe attached to the valve/actuator)* has detected water flow surpassing your **Trip Rate** for longer than your **Time to Alarm** setting.

  This indicates a potential leak that you will want to investigate. Use the following scenarios:

If the water flow is due to a routine activity that normally occurs within your household:

You may want to adjust the Leak Defense System settings. If so, you will first select **Clear Alarm** and then select **Turn Water On**. You can then:

1) Increase the **Time to Alarm** setting or

2) For humidifiers and under-sink reverse osmosis (RO) systems, increase the **Trip Rate** setting

**Increasing the Trip Rate will make your system less sensitive to smaller leaks.*

If you are filling a swimming pool, watering landscape for an extended time, or running water for some other reason, do the following after selecting Clear Alarm and Turn Water On:

Tap the **Scene** button and select **Standby**. Tap the **Time** icon and enter the amount of time desired for the system to remain in **Standby** in minutes (Max is 48 hours or 2880 minutes). Tap the checkmark ✔ to confirm the time. *(This ignores water flow & avoids flow alarms.)*

If there is nothing unexpected happening:

If you don't believe your water settings are set too conservatively, you will want to **check for a leak**.

**These can be small leaks such as old toilet flappers, outdoor garden hoses, or small drips from tub or sink faucets.*

 © 2025 Intelligent Water Solutions by Watts, Inc.

OWNER'S MANUAL: POINT OF LEAK DETECTORS (POLD)

The POLD will start chirping when either its sensor pins detect water, or if the attached Water Detection Cable gets continuity across the two black conductors (for 1 continuous second).

The unit will self-clear 5 seconds after the sensor pins or cable is dry.

The POLD will alarm at the Control Panel, and if the app is set up properly (& the Control Panel has working WiFi) it will send notifications via email, sms, and push.

WiFi is not required for POLD alarms to shut off the Leak Defense System valve.

NOTE 1: The POLD sensor pins or Water Detection Cable must be dried before you can clear the alarm on the Control Panel.

NOTE 2: Batteries should be replaced in regular intervals and after alarms to ensure full power.

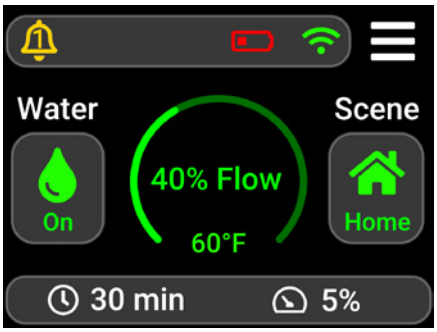

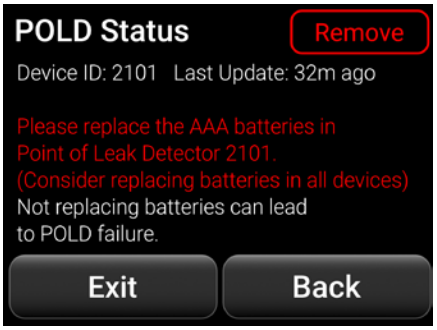

Clearing POLD Alarms

Step 1: Verify which POLD is alarming

- Check which POLD most recently alarmed based on the Last Alarm device name/number shown on the Control Panel. The underside of the POLD has a matching sticker number, or open the Leak Defense mobile app (or catchaleak.com) to view/edit the custom names. "View Alarming Devices" lists all active alarming devices.
- Locate the Point of Leak Detector (POLD) that is in alarm by listening to its chirp.

Step 2: Clear the alarming POLD

The unit should self-clear once the sensors are dry. If this does not happen, open the battery compartment on the POLD and press the reset button for 1-3 seconds until silent (or remove and re-insert one battery).

NOTE: For non-standard mesh style cable, if the Water Detection Cable is still wet, you may need to remove the batteries for 24-48 hours until it dries. If the POLD is still going into alarm after being allowed 48 hours to dry, please call Leak Defense.

Step 3: Clear Alarm on the Control Panel

- Once the cause of the alarm is identified and handled, you may press the Clear Alarm button on the control panel. This should proceed to a screen indicating if the water is off.
- If the system alarms again, check the POLD # after "Last Alarm:" on the Control Panel to see if it matches the POLD that was cleared. If different, repeat Step 1 & 2.

How & When to Change POLD Batteries

Step 1: Verify which POLD has a low battery

- When a POLD has low batteries, it will periodically chirp.
- This can be verified by tapping on the control panel to wake it up. There will be a low battery indicator in the top section of the panel. Tap this icon to view details.

Step 2: Replace the batteries

- With the antenna facing away from you, the battery that is on the left should have positive (+) facing away from you. The battery that is on the right should have positive (+) facing toward you and away from the reset button

NOTE: Verify that batteries are installed properly by tapping the reset button and ensuring the LED lights up and is solid

Step 3: Clear alert on the Control Panel

- Press the low battery indicator on the Control Panel and follow the on-screen steps to clear the alert on the panel

 © 2025 Intelligent Water Solutions by Watts, Inc.

Set Up Internet Connection & Web-Based App

Compatible with most 2.4 GHz networks

WiFi

First connect to your WIFI access point

- Tap the Menu ≡ icon on Leak Defense Panel
- Tap WiFi (can also be done from the main screen)
- Tap View Networks and highlight your access point
- Tap Select and enter your password
- Tap ✓ twice and your panel will ask you to Save Changes
- Tap Ok

The WiFi icon on the main screen will be GREY while it attempts to connect. If successful, the icon will turn GREEN. If unsuccessful it will turn RED

- *If an incorrect password or access point is entered into the control panel you should go through the steps again and select the correct router and password*
- *Router security/settings may restrict WiFi connection to the LDS. A separate access point may need to be purchased.*

Web-based access

On your phone or laptop go to www.catchaleak.com or download the **Leak Defense** app from the IOS or Android store

- Click on REGISTER AS A NEW USER
- Fill out the form including the DEVICE ID that was supplied with your system. Click on REGISTER. You should get a notice thanking you for registering
- You will immediately receive an email with a link and/or a text to which you will have to reply with a confirmation number. (Check your junk email)
- If on www.catchaleak.com, close the page and reopen
- Log in with your email address and password you selected
- You will see a tile with a flow arc for each device you have registered
- Selecting a device gives you access to control that device

Web-based access (continued)

- You can switch from **Home** to **Away** or **Standby**
- You can also adjust the **Trip Rate** and the **Time to Alarm**
- You can also schedule times for your system to automatically change scenes between **Home** and **Away** (Click a system tile then click the Schedules tab)

Dashboard

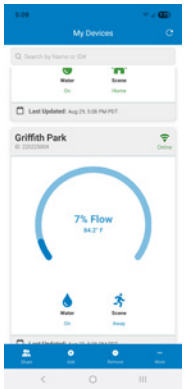

Dashboard

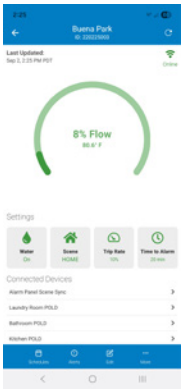

Controls

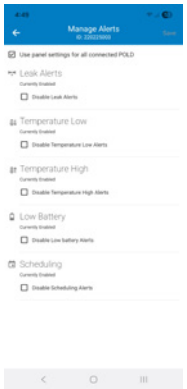

Notifications

To connect **Additional Devices**:
Click **Add** on the bottom of the app or the left menu on catchaleak.com. Enter the device ID for the other unit and the other necessary information. Once added, you'll see all of your systems from the **My Devices** tab.

To **Share Devices with Others**:
Click **Share** on the bottom of the app or the left menu on catchaleak.com. Enter the email address of the user(s) you wish to share with. Check each device you wish to share with that user. If they do not have an account, an email will be sent to them to create one.

 © 2025 Intelligent Water Solutions by Watts, Inc.

OWNER'S MANUAL: CONTROL PANEL

Fine-tuning to Your Lifestyle

The Leak Defense System is designed to minimize the chance of a leak in your home from becoming a catastrophic flood by catching and stopping a leak as early as possible.

The System has two basic modes, the **Home** scene and the **Away** scene. Each of these scenes has two variable settings, the **Trip Rate** and **Time to Alarm**. Understanding these settings will enable you to make the correct decisions to maximize the protection of your home against water damage.

Home Scene

In the **Home** scene the default setting for the **Trip Rate** is set to 10% and the **Time to Alarm** is set to 20 minutes. This means that water must flow above a trip rate of 10% continuously for 20 minutes for the system to alarm. At any point when the **Trip Rate** drops below 10% the clock resets.

These settings can and should be adjusted to conform to your daily water use and level of protection you desire. For instance, if you normally take a 15 minute shower you should set the time to alarm to 20 minutes or more. If you have an active home you may need to set your time to alarm to 45 minutes or longer. A key point to remember is that dishwashers and washing machines may run for an hour or more, but they only pull water for a few minutes.

One way to determine exactly where to set the flow is to partially open a faucet and then look at the flow arc to see what percentage that flow is. Continue to close the faucet and compare the flow rate at the faucet with the flow rate displayed on the flow arc. This will help you to decide where you want to set the **Trip Rate**. If you are concerned with very small leaks you should set the **Trip Rate** as low as possible (2 or 3%) without the system alarming.

The first few weeks after installation the system may alarm. Be aware that these are not "false alarms." If the system goes off, water is/was flowing somewhere in your home. For the first time you now have the ability to know when water is flowing in your home with this system. Adjusting your **Time to Alarm** and **Trip Rate** will allow you to optimally protect your home and not have nuisance alarms, the combination most people are looking for.

Away Scene

In the Away scene, the default setting for the **Trip Rate** is 10% and the **Time to Alarm** is 3 minutes. Here again, if you are concerned with very small leaks you should adjust the **Trip Rate** to as low as possible without the system alarming. Most people end up with a **Trip Rate** of 10% or less and 2-5 minutes **Time to Alarm** in the **Away** scene.

Standby Scene

If an accessory like a flow switch, relay or timer has been added to put the Leak Defense System into the **Standby** scene for any reason, during that time the house is unprotected. When in the **Standby** scene, the Leak Defense System does not monitor water flowing and may allow a leak to go undetected. **Standby** is designed to be used when there is intentional water flow for an extended period of time. It is always preferred to separate pool and irrigation feeds from the house supply line.

Point of Leak Detectors (POLDs) are typically configured to alarm even while the system is in **Standby**. This can help detect leaks while flow monitoring is suspended.

This setting can optionally be changed on the Control Panel by pressing the **Menu** ☰ button, **Advanced**, then setting POLD Alarms During Standby ("**POLD SB**") to either **Enabled** *(POLDs will still alarm the system during Standby scene)* or **Disabled** *(POLD alarms will be ignored during the Control Panel Standby scene)*.

Please make sure all users and owners of the Leak Defense System are made aware of the information on this page. Contact our office if you have any questions.

Need Help?

Unsure how to change the settings to your preferences? No problem! Just give us a call and we'll happily walk you through it over the phone. **Feel free to call us from 8am - 5pm Pacific Time at (866) 410-1134, ext. 2**

We hope these tips are helpful. Please complete your Warranty Card included with your system or complete the on-line form at www.leakdefense.com/warranty if you prefer.

 © 2025 Intelligent Water Solutions by Watts, Inc.

LEAK DEFENSE SYSTEM LIMITED WARRANTY

Warranty Period:

The manufacturer warrants its products that are sold and installed in the United States to be free of defects in materials and workmanship under normal use and service for a period of two (2) years from the date of purchase by the end user.

Warranty Coverage:

The manufacturer's obligations shall be limited within the warranty period, at its option, to repair or replace the product or any part thereof. In order for the warranty to apply, the Leak Defense System must be installed by a licensed plumber, licensed General Contractor or approved installer. Any recommendation or referral of or to a local installer, licensed contractor or service provider Is provided as an accommodation to the end user of the product and shall not infer nor create liability or agency relationship flowing back to the manufacturer. The manufacturer shall not be responsible for dismantling and/or re-installation charges.

FOR WARRANTY CLAIMS, CONTACT SENTINEL HYDROSOLUTIONS AT WWW.SENTINELHYDROSOLUTIONS.COM OR CALL 1-866-410-1134

Items Not Covered:

Neither the manufacturer nor the seller of the Leak Defense System shall be liable for any damage or loss whatsoever whether directly, indirectly, consequentially or otherwise, caused by the malfunction of the product or a problem arising from the installation or calibration of the product.

The product as designed will not prevent leaks; but rather it identifies possible leaks in the monitored water distribution system caused by a significant variance in water flow over time and is designed to stop the supply of water to the identifiable plumbing providing water to the structure if the flow of water exceeds the preset parameters. The manufacturer shall not be responsible for damages including but not limited to, damages for loss of profits, goodwill use or other intangible losses (even if the manufacturer has been advised of the possibility of such damages) resulting from the failure of the Leak Defense System or associated equipment.

The manufacturer does not represent that its product may not be compromised and/or circumvented, or that the product will prevent any flood or damage to property resulting from a water leak or otherwise that the product will, in all cases, provide adequate warning or protection. Particularly in structures that the manufacturer or the installer(s) are unable to clearly identify the entirety of the water distribution system.

User or owner EXPRESSLY UNDERSTANDS AND AGREES that neither the seller nor the manufacturer has control on the final use of this product, its good working condition, proper installation and its reasonable maintenance and that consequently, a properly installed and maintained system may only reduce the risk of an event involving water damage in specific circumstances:

- Damage or operational deficiencies due to water quality issues such as sediment or scale accumulation.
- Damaged caused by plumbing that is not monitored by the system.
- Replacement of house fuses or resetting of circuit breakers.
- Damage to the product caused by accident, fire, or acts of God.
- Damage caused after delivery.

The above is in lieu of all others warranties; guarantees, statements expressed or implied and the items listed are not intended to be all-inclusive but rather representative of items not covered. The warranty is limited to the express warranty set forth herein. No warranty whether express or implied shall apply beyond the two (2) year limited warranty period outlined above. Some states do not allow limitations on whether an implied warranty applies or how long an implied warranty lasts, therefore the above limitation may not apply to you. To know what your legal remedies or rights might be, consult your local state consumer affairs office or your state's Attorney General.

 © 2025 Intelligent Water Solutions by Watts, Inc.

Notes:

 © 2025 Intelligent Water Solutions by Watts, Inc.

Notes:

 © 2025 Intelligent Water Solutions by Watts, Inc.

INSTALLER

Please leave this guide with the homeowner when installation is complete

QR Codes & Links

Scan these QR codes with your phone camera to visit the web pages

Videos

LeakDefense.com/videos

Help/FAQ

LeakDefense.com/FAQ

Document Downloads

LeakDefense.com/informational-downloads

Contact

LeakDefense.com/contact

Products

LeakDefense.com/products

Applicable product versions:

- Control Panel 7.11
- LDS-3 3.16
- API-2 2.02
- POLD 4.00

LEAK DEFENSE®

A WATTS Brand

USA: T: (866) 410-1134 • Sales@senthydro.com • LeakDefense.com

 © 2025 Intelligent Water Solutions by Watts, Inc.